Contents 目录

1. Description 产品介绍 3
1.1General Description 产品描述 3
1.2Features 产品特征 3
1.3Application 产品应用 3
1.4Package Dimension 封装尺寸 4
1.5Product Parameters 产品参数 5
1.6 Bin Range Of Forward Voltage and Luminous Flux (IF=60mA) 电压与流明分 BIN 范围 (IF=60mA) 6
1.7 Typical optical characteristics curves 典型光学特性曲线 8
2. Packaging 产品包装 12
2.1 Packaging Specification 包装规格 12
2.1.1Carrier Tape Dimension 载带尺寸 12
2.1.2Reel Dimension 卷盘尺寸 12
2.1.3Label Form Specification 标签规格 13
2.2Moisture Resistant Packing 防潮包装 13
2.3Cardboard Box 包装纸箱 13
2.4 Reliability Test Items And Conditions 信赖性测试项目及条 14
2.5 Criteria For Judging Damage 失效判定标准 15
3. SMT Reflow Soldering Instructions SMT 回流焊说明 16
3.1SMT Reflow Soldering Instructions SMT 回流焊说明 16
4. Handling Precautions 产品使用注意事项 18
4.1 Handling Precautions 产品使用注意事项 18

1. Description 产品介绍

1.1General Description 产品描述

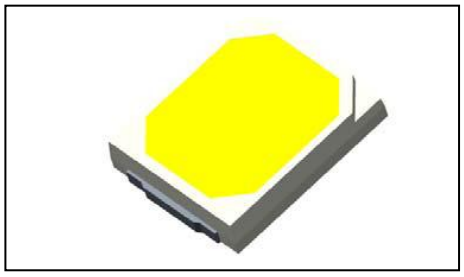

The White LED which was fabricated using a purple chip and the phosphor

Product Package: 2.8mmX3.5mmX0.7mm.

该产品为白光 LED，是由紫光芯片激发荧光粉而形成，产品尺寸：2.8mmX3.5mmX0.7mm。

1.2Features 产品特征

►PLCC-2 Package.封装

►Extremely wide viewing angle.发光角度大

►Suitable for all SMT assembly and solder process.适用于所有的SMT组装和焊接工艺

►Available on tape and reel.适用于载带及卷轴

►Moisture sensitivity level: Level 3.防潮等级 Level 3

►RoHS compliant.满足RoHS要求

1.3Application 产品应用

►Optical indicator.光学指示

►Indoor display.室内显示

►Tubular light application.用于日光灯管

►General use.其他应用

►Not suitable for lexible strip.不适用于软灯条

1.4Package Dimension 封装尺寸

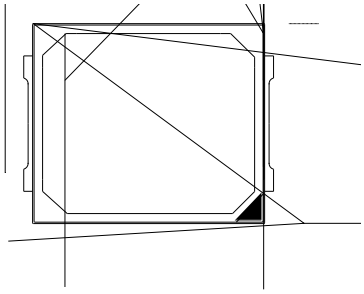

Fig.1-1 Top view 正面视图

Fig.1-2 Side view 侧面视图

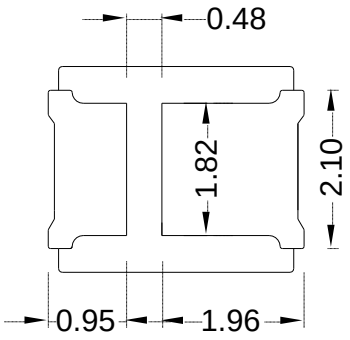

Fig.1-3 Bottom view 背面视图

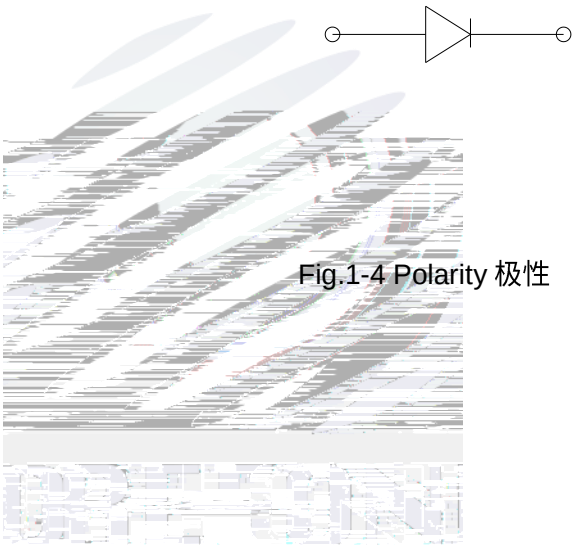

Fig.1-4 Polarity 极性

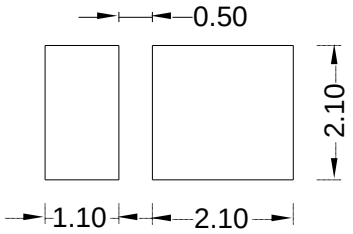

Fig.1-5 Soldering patterns 推荐焊盘

Notes 备注：

1. All dimensions units are millimeters. 所有尺寸标注单位为毫米
2. All dimensions tolerances are ±0.05mm unless otherwise noted.除特别标注外，所有尺寸公差为±0.05 毫米

Notes 备注:

1. 1/10 Duty cycle, 0.1ms pulse width. 脉宽0.1ms,占空比1/10.

2. The above forward voltage measurement allowance tolerance is ±0.05V. 以上所示电压测量误差 ±0.05V.

3. The above color coordinates measurement allowance tolerance is±0.005. 以上所示坐标测量误差±0.005

4. The above luminous intensity measurement allowance tolerance ±10%. 上述发光强度的测试允许公差为±10%.

5. Care is to be taken that power dissipation does not exceed the absolute maximum rating of the product. 使用功率不能超过规定的最大值。

6. All measurements were made under the standardized environment of Refond. 所有测试都是基于瑞丰现有的标准测试平台。

7.When the LEDs are in operation the maximum current should be decided after measuring the package temperature，junction temperature should not exceed the maximum rate. LED 使用的最大电流需要根据散热条件确定，结温不能超过最大值。

8. ESD yield is over 90% at 2000V ESD (HBM). ESD protection during products handing is needed. 90%的LED通过人体模式ESD2000V 测试, 在操作时请注意静电防护。

1.6 Bin Range Of Forward Voltage and Luminous Flux (IF=60mA)电压与流明分BIN 范围(IF=60mA)

Table 1-3

VF V RF-40QI32DS-FH-N	G2	H1	H2
	2.9-3.0	3.0-3.1	3.1-3.2
φ lm RF-40QI32DS-FH-N	QED	QGD	QHA
	20-22	22-24	24-26

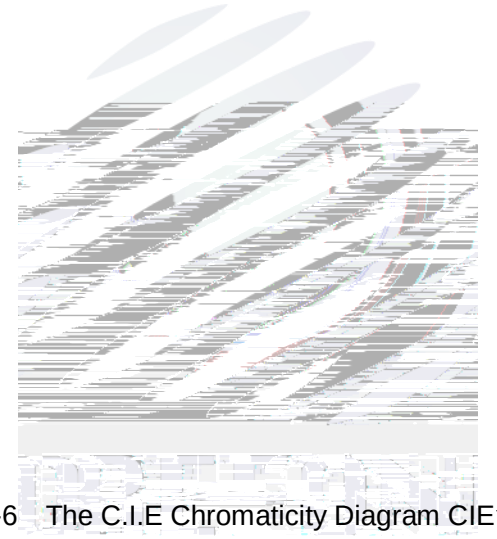

Fig 1-6 The C.I.E Chromaticity Diagram CIE色度图

Table 1-4

BIN CODE	X1	Y1	X2	Y2	X3	Y3	X4	Y4
40K	0.3902	0.3911	0.3776	0.3833	0.3740	0.3687	0.3855	0.3757

BIN CODE	X1	Y1	X2	Y2	X3	Y3	X4	Y4	X5	Y5	X6	Y6
40A	0.3693	0.372	0.3655	0.3566	0.3774	0.3639	0.3797	0.3722	0.374	0.3687	0.3758	0.376
40B	0.3862	0.3955	0.3992	0.4036	0.3943	0.3874	0.3878	0.3834	0.3902	0.3911	0.3839	0.3872
40C	0.3862	0.3955	0.3732	0.3873	0.3693	0.372	0.3758	0.376	0.3776	0.3833	0.3839	0.3872
40D	0.3943	0.3874	0.3893	0.3713								

1.7 Typical optical characteristics curves 典型光学特性曲线

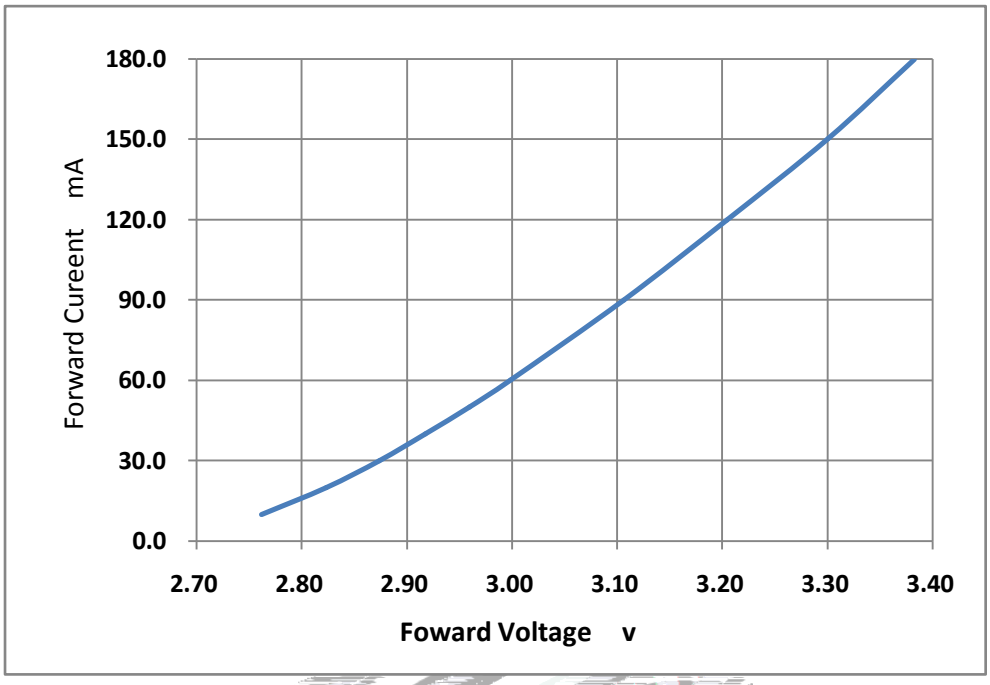

Fig 1-7 Forward Voltage Vs. Forward Current伏安特性曲线

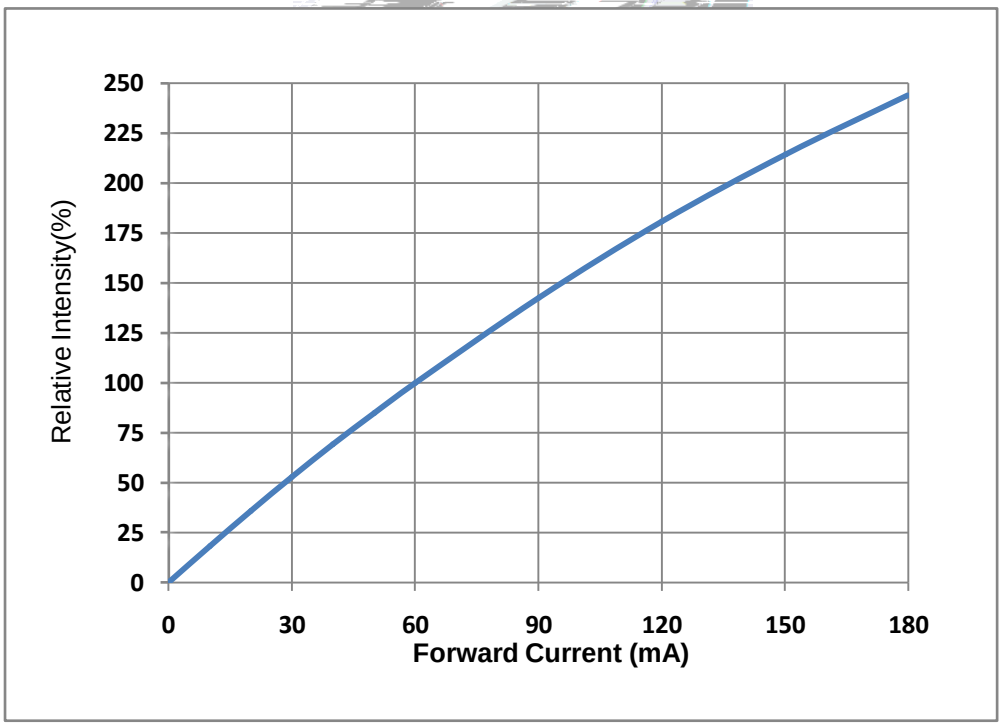

Fig 1-8 Forward Current Vs. Relative Intensity正向电流与相对光强特性

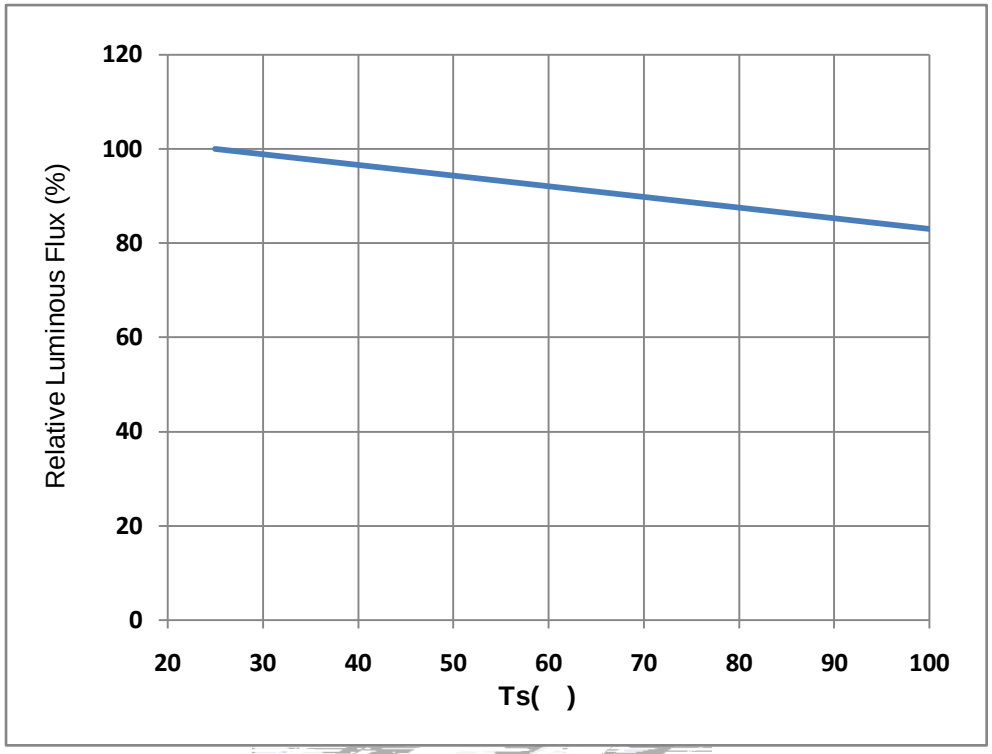

Fig 1-9 Pin Temperature Vs Relative Intensity管脚温度与相对光强特性曲线

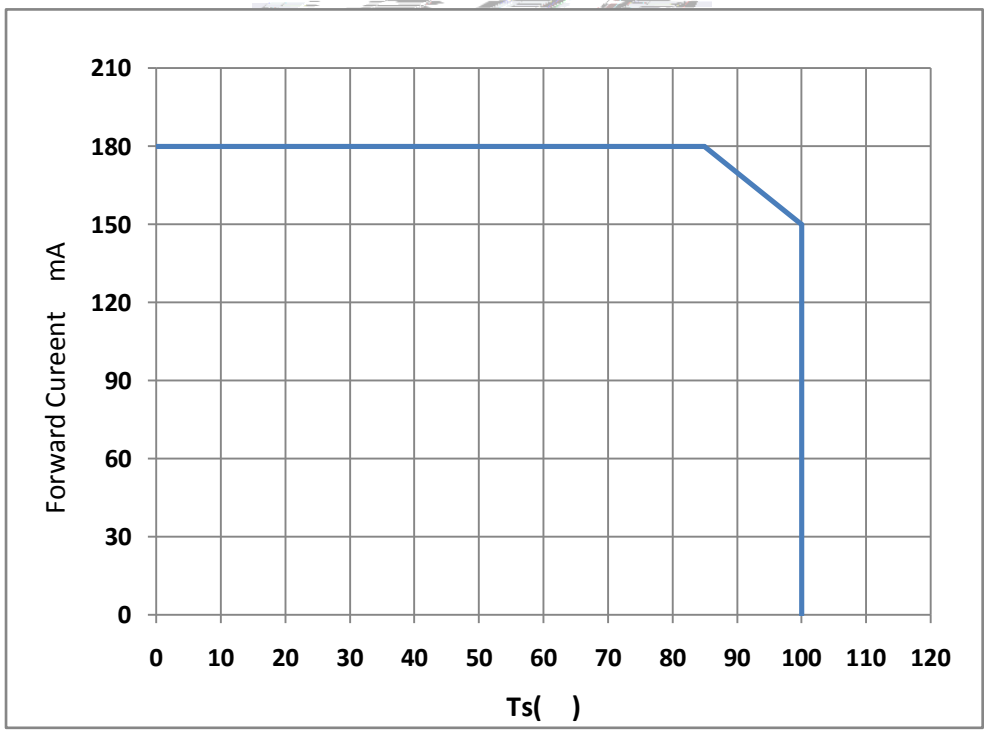

Fig 1-10 Pin Temperature Vs.Forward Current管脚温度与正向电流特性曲线

Tj≤125℃

Tel:+86-755-66839118 Fax:+86-755-66839300 E-mail:sales@refond.com Web:

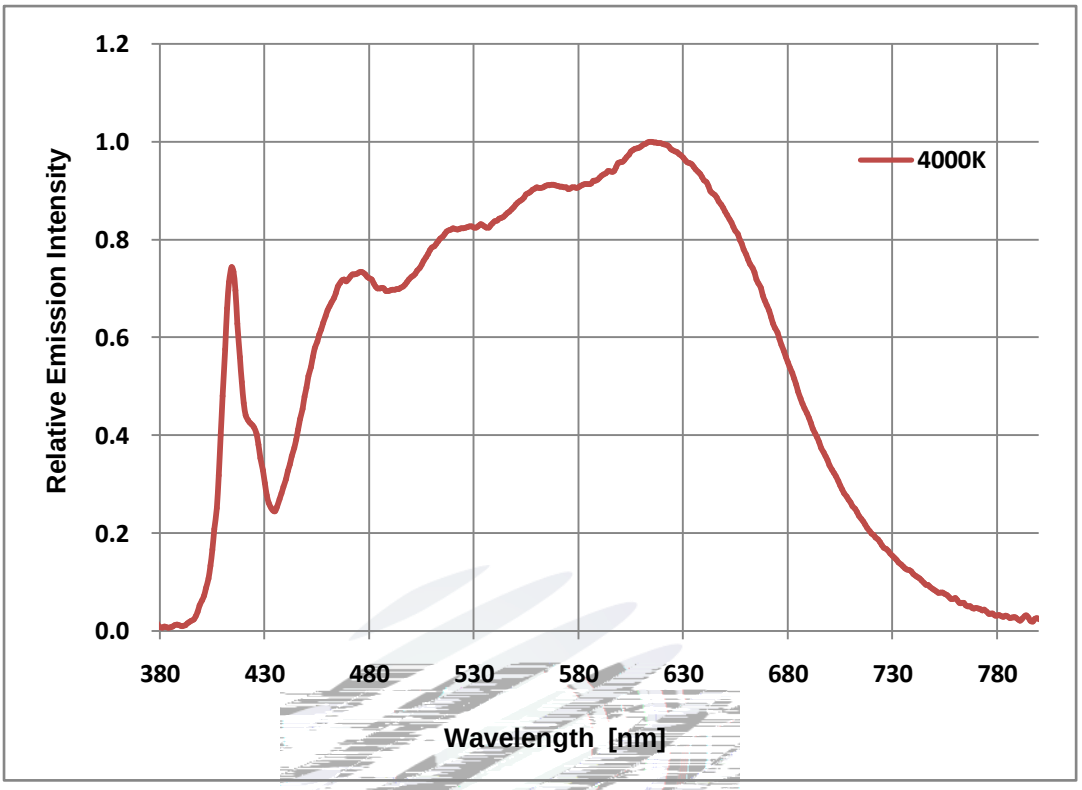

Fig 1-13 Spectrum Distribution光谱分布特性曲线

2. Packaging 产品包装

2.1 Packaging Specification 包装规格

Package:12000pcs/reel.包装每卷 12000pcs。

2.1.1Carrier Tape Dimension 载带尺寸

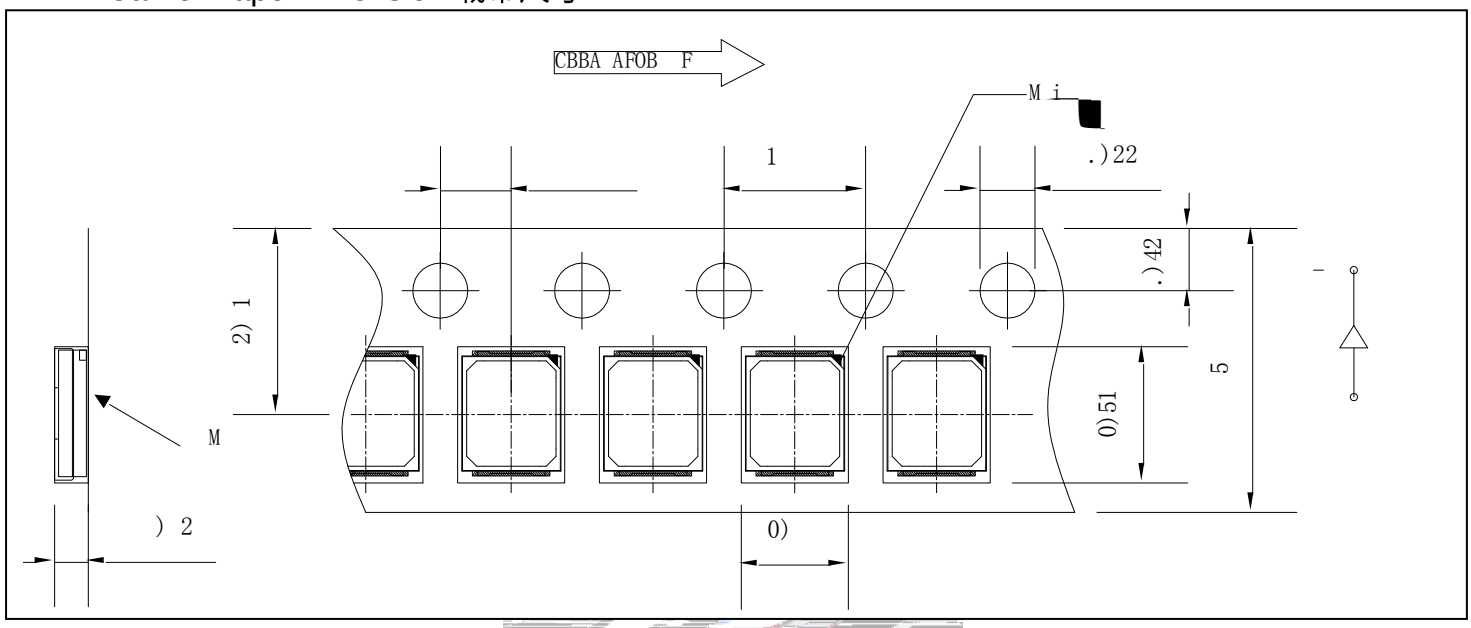

Fig.2-1 Carrier Tape Dimension 载带尺寸

2.1.2Reel Dimension 卷盘尺寸

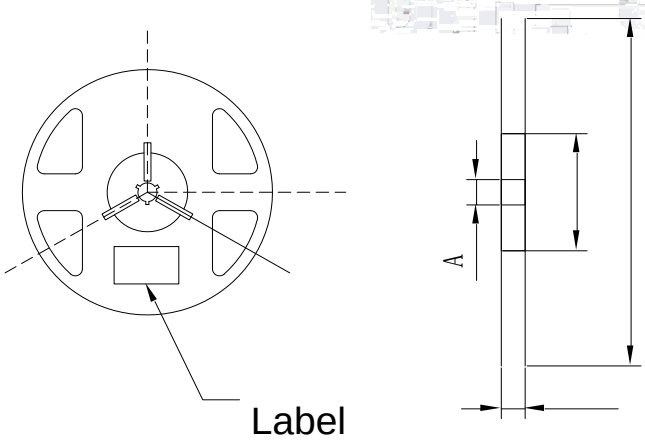

Fig.2-2Title

Table 2-1 Title

A	12.2±0.3mm
B	290±2mm
C	79.6±0.2mm
D	14.2±0.2mm

Notes 备注:

The tolerances unless mentioned ±0.1mm. Unit : mm注：未注公差为±0.1毫米，尺寸单位：毫米。

2.1.3Label Form Specification 标签规格

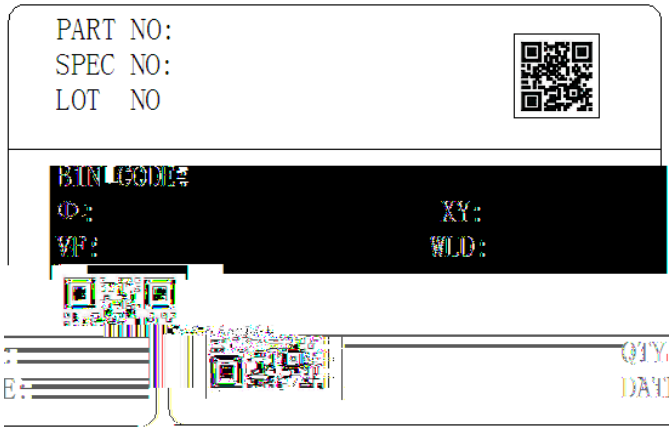

Fig 2-3 Title

Table 2-2 Title

PART NO.	Part Number 品名
SPEC NO.	Spec Number 规格
LOT NO.	Lot Number 批次号
BIN CODE	Bin Code 参数代码
Φ	Luminous flux 光通量
XY	Chromaticity Bin 色区
V_F	Forward Voltage 正向电压
WLD	Wavelength 波长代码
QTY	Packing Quantity 数量
DATE	Made Date 生产日期

2.2Moisture Resistant Packing 防潮包装

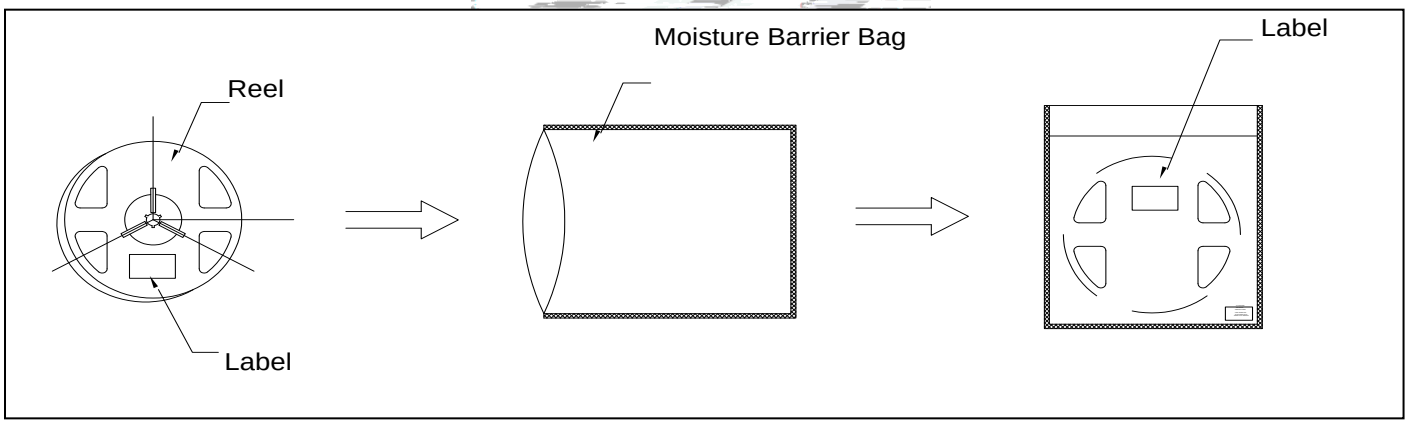

Fig.2-1 Title

2.3Cardboard Box 包装纸箱

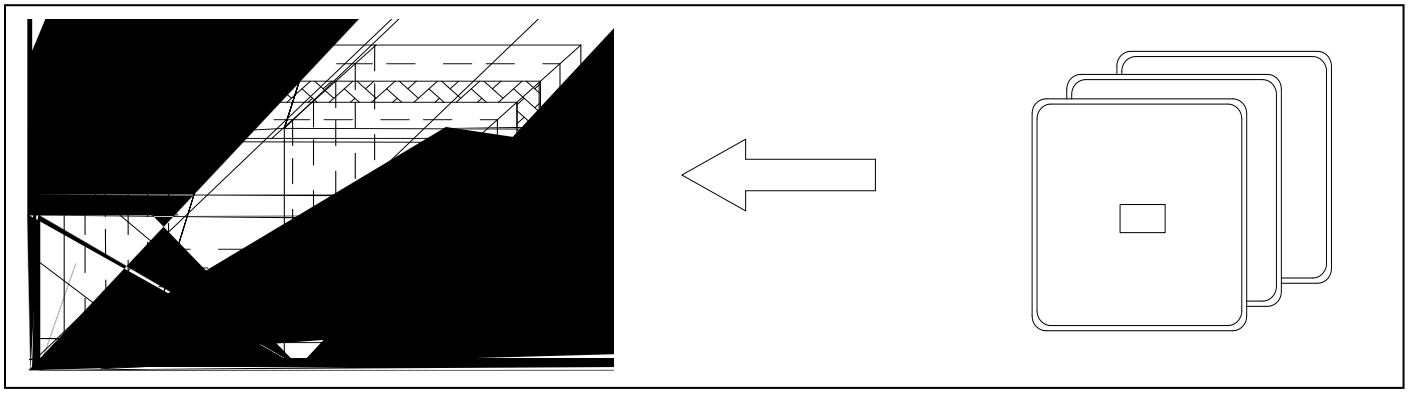

Fig.2-2Title

2.4 Reliability Test Items And Conditions 信赖性测试项目及条件

Table 2-3 Title

TestItems 项目	Ref.Standard 参考标准	Test Condition 测试条件	Time 时间	Quantity 数量	Ac/Re 接收/拒收
Reflow 回流焊	JESD22-B106	Temp:260℃max T=10 sec	2times	20pcs	0/1
Thermal Shock 冷热冲击	JEITAED-4701 300307				

Tel:+86-755-66839118 Fax:+86-755-66839300 E-mail:

3. SMT Reflow Soldering Instructions SMT 回流焊说明

3.1SMT Reflow Soldering Instructions SMT 回流焊说明

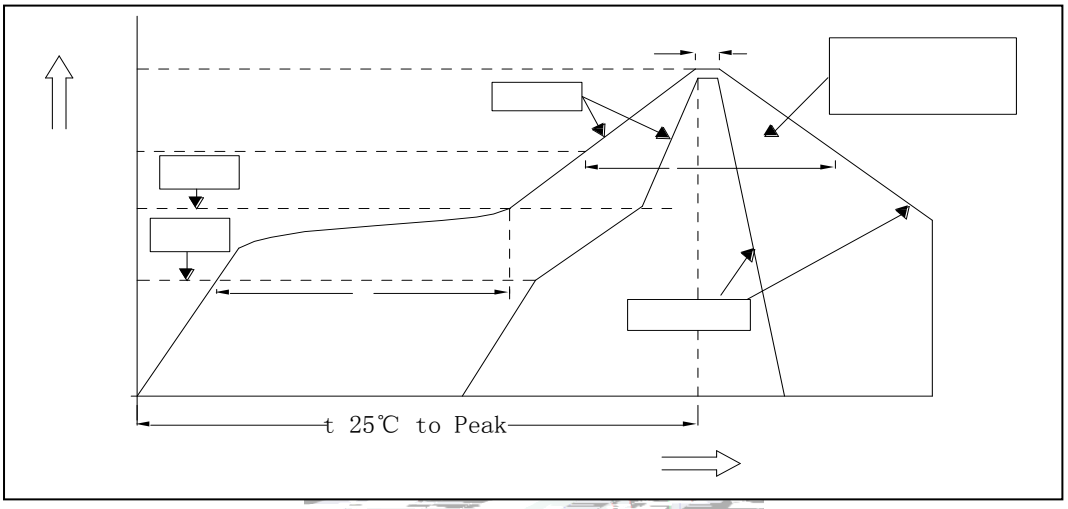

Fig.3-1Title

Table 3-1Title

Average temperature rise speed平均升温速度（Tsmax 至T_P）	最高3 °C/秒 Max 3 °C/ s
Preheating: minimum temperature预热：最低温度 (Tsmin)	150 °C
Preheating: Max temperature预热：最高温度 (Tsmax)	200 °C
Preheating: Time预热：时间（Tsmin 至Tsmax）	60 - 120秒 60s-120s
Time limited to maintain high temperature: the temperature限时维持高温：温度 (T_L)	217 °C
Time limited to maintain high temperature: The Time 限时维持高温：时间 (t_L)	最多60秒 Max 60s
Peak /Classification of temperature:峰值 / 分类温度 (T_P)	260 °C
Time limit classification of peak temperature time限时峰值分类温度：时间（t_p）	最多10秒 Max 10s
Hold time within 5 °C with the actual peak temperature (TP) 与实际峰值温度 (T_P) 相差 5 °C 以内的保持时间	最多30秒 Max 30s
Cooling speed 降温速度	最高6 °C/秒 Max 6 °C/ s
Needed time from 25 °C to Tp 25 °C 升至峰值温度所需时间	最多8分钟 Max 8 minutes

Notes 备注:

(1)Reflow soldering should not be done more than two times. In the case of more than 24 hours passed soldering after first, LEDs will be damaged. 回流焊次数不可以超过两次，两次回流焊的时间间隔如果超过24小时，LED可能由于吸湿而损坏。

(2)Whensoldering , do not put stress on the LEDs during heating.当焊接时，不要在材料受热时用力压胶体表面。

3.1.1 Soldering Iron 烙铁焊接

(1) When hand soldering, keep the temperature of iron below less 300℃ less than 3 seconds 当手工焊接时，烙铁的温度必须小于300℃，时间不可超过3秒。

(2) The hand solder should be done only one time.手工焊接只可焊接一次。

3.1.2 Repairing 修补

Repair should not be done after the LEDs have been soldered. When repairing is unavoidable,a double-head soldering iron should be used (as below figure). It should be confirmed in advance whether the characteristics of LEDs will or will not be damaged by repairing.

LED回流焊后不应该修复，当必须修复时，必须使用双头烙铁，而且事先应确认此种方式会不会损坏LED本身的特性。

3.1.3 Cautions 注意事项

. The encapsulated material of the LEDs is silicone. Therefore the LEDs have a soft surface on the top of package. The pressure to the top surface will be influence to the reliability of the LEDs. Precautions should be taken to avoid the strong pressure on the encapsulated part. So when usethe picking up nozzle, the pressure on the silicone resin should be proper. LED封装胶为硅胶，表面较软，用力按压胶体表面会影响LED可靠性，因此应有预防措施避免在按压器件，当使用吸嘴时，胶体表面的压力应是恰当的。

(2) Components should not be mounted on warped (non coplanar) portion of PCB. After soldering, do not warp the circuit board.LED 灯珠不要焊接在弯曲的 PCB 板上，焊接之后，也不要弯折线路板。

(3) Do not apply mechanical force or excess vibration during the cooling process to normal temperature after soldering. Do not rapidly cool device after soldering.回流焊之后冷却过程中，不

4. Handling Precautions 产品使用注意事项

4.1 Handling Precautions 产品使用注意事项

(1) LED operating environment and sulfur element composition cannot be over 100PPM in the LEDmating usage material. This is provided for informational purposes only and is not a warranty or endorsement.LED 工作环境及与 LED 适配的材料中硫元素及化合物成份不可超过 100PPM.这只是一个建议，不作任何品质担保。

(2) In order to prevent ex-ternal material from getting into the inside of LED, which may cause the malfunction of LED, the single content of Bromine element is required to be less than 900PPM,the single content of Chlorine elementis required to be less than 900PPM,the total content of Bromine element and Chlorine element in the external materials of the application products is required to be less than 1500PPM. This is provided for informational purposes only and is not a warranty or endorsement.为了防止外界物质进入 LED 内部以造成 LED 的损伤，所处环境及所用套件等等，单一的溴元素含量要求小于 900PPM，单一氯元素含量要求小于 900PPM，溴元素与氯元素总含量必须小于 1500PPM. 这只是一个建议，不作任何品质担保。

(3) VOCs (Volatile organic compounds) emitted from materials used in the construction of fixtures can penetrate silicone encapsulants of LEDs and discolor when exposed to heat and photonic energy. The result can be a significant loss of light output from the fixture. Knowledge of the properties of the materials selected to be used in the construction of fixtures can help prevent these issues. Refond advises against theuse of any chemicals or materials that have been found or are suspected to have an adverse affect on device performance or reliability. To verifycompatibility, Refond recommends that all chemicals and materials be tested in the specific application and environment for which they are intended tobe used. Attaching LEDs, do not use adhesives that outgas organic vapor. 应用套件中的挥发性物质会渗透到 LED 内部，在通电产生光子及热的条件下，会导致 LED 变色，进而造成严重光衰，提前了解套件材料能够避免产生这些问题。瑞丰反对使用任何对 LED 器件的性能或者可靠性有害的物质或材料，不管这些材料是已经证实了的

还是仅仅怀疑有害，针对特定的用途和使用环境，瑞士建议对所有的物质和材料进行相容性的测试。在贴装 LED 时候，不要使用能产生有机挥发性气体的粘结剂。

(4) Handle the component along the side surface by using forceps or appropriate tools; do not directlytouch or Handle the silicone lens surface, it may damage the internal circuitry.通过使用适当的工具从材料侧面夹取，而不可直接用手或发送的反压陪信夹取，实可能会损坏内部电路。

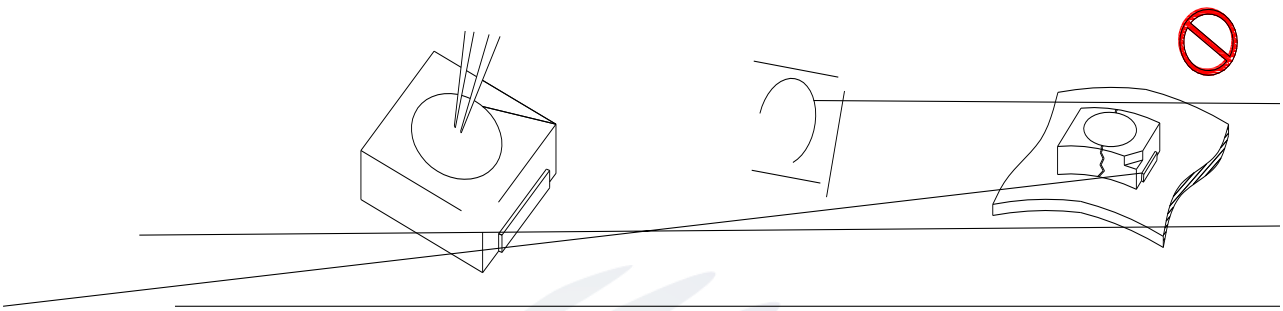

Fig 4-1 Title

(5) In designing a circuit,the current through each LED can not be exceed the absolute maximum rating specified for each LED.In the meanwhile,resistors for protection should be applied,otherwise slight voltage shift will cause big current change,burn out may happen. The driving circuit must be designed to allow forward voltage only when it is ON or OFF.If the reverse voltage is applied to LED, migration can be generated resulting in LED damage. 设计电路时，通过 LED 的电流不能超过规定的最大值，同时，还需使用保护电阻，否则，微小的电压变化将会引起较大电流变化，可能导致产品损毁。电路设计必须保证只有在开启或者关闭的时候出现正向电压的变化，不要施加反压，否则会损坏 LED。

(6) Thermal Design is paramount importance because heat generation may result in the Characteristics decline,such as brightness decreased,Color change and so on.Please consider the heat generation of the LEDs when making the system design.LED 容易因为自身的发热和环境的温度改变而改变，温度升高会降低 LED 发光效率，影响发光颜色，所以在设计时应充分考虑散热问题。

(7) Compared to standard encapsulants, silicone is generally softer, and the surface is more likely to attract dust,requiring special care during processing. In cases where a minimal level of dirt and dust particles cannot be guaranteed, a suitable cleaning solution must be applied to the surface after the soldering of components. Refond suggests using isopropyl alcohol for cleaning. In case

Date日期	Revisor修订者	Version版本	Verifier审核	Remarks备注
2021-2-1		E/0		

瑞豐光電 REFOND

www.refond.com

Declare 申明

This specification is written both in English and in Chinese and the latter is formal.

产品规格书以中英文方式书写，若有冲突以中文版本为准。