SPECIFICATION
产品规格书

REFOND P/N 产品型号

RF-AL-C3535L2K1DR-00

■R&D 研发

□Mass Product 量产供货

Contents 目录

1. Description 产品介绍

1.1General Description 产品描述

1.2Features 产品特征

Size(mm): 3. 45×3. 45×2.35mm. 尺寸(mm): 3. 45×3. 45×2.35mm

1.3 Application 产品应用

1.4 Package Dimension 封装尺寸

1.5Product Parameters 产品参数

1.6 Typical optical characteristics curves 典型光学特性曲线

2. Packaging 产品包装

2.1 Packaging Specification 包装规格

`2.1.1 Carrier Tape Dimension 载带尺寸.....10

2.1.2 Reel Dimension 卷盘尺寸.....10

2.1.3 Label Form Specification 标签规格.....11

2.3 Cardboard Box 包装纸箱

2.4 Reliability Test Items And Conditions 信赖性测试项目及条件

2.5 Criteria For Judging Damage 失效判定标准

3. SMT Reflow Soldering Instructions SMT 回流焊说明

3.1SMT Reflow Soldering Instructions SMT 回流焊说明

4. Handling Precautions 产品使用注意事项

4.1 Handling Precautions 产品使用注意事项

1.4 Package Dimension 封装尺寸

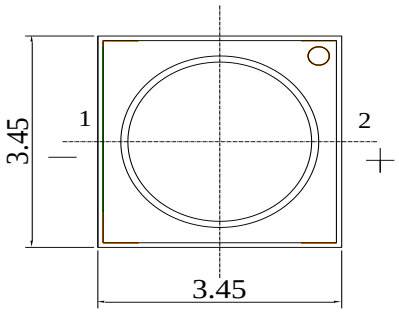

Fig.1-1 Top view 正面视图

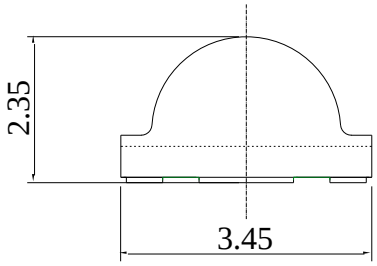

Fig.1-2Side view 侧面视图

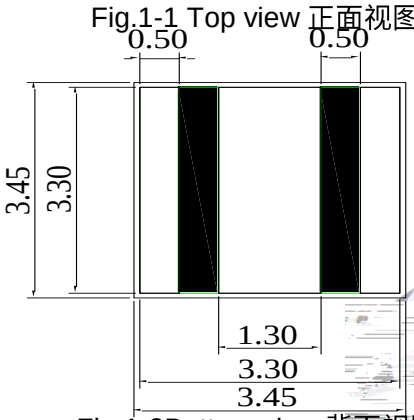

Fig.1-3Bottom view 背面视图

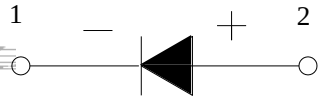

Fig.1-4Polarity 极性

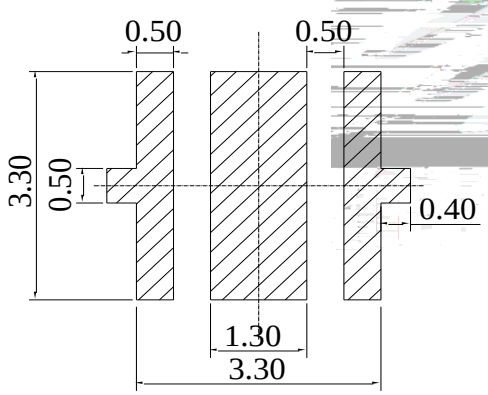

Fig.1-5Soldering patterns 推荐焊盘

Notes 备注

1. All dimensions units are millimeters. 所有尺寸标注单位为毫米

2. All dimensions tolerances are ±0.2mm unless otherwise noted.除特别标注外，所有尺寸公差为±0.2 毫米

1.5Product Parameters 产品参数

Table 1-1 Electrical / Optical Characteristics at Ts=25°C 电性与光学特性

Item 项目	Symbol 符号	Test Condition 测试条件	Value			Unit 单位
			Min. （最小值）	Typ （典型值）	Max. （最大值）	
Reverse Current （漏电流）	I_R	V_R=5V	---	---	10	uA
Forward Voltage （正向电压）	V_F	I_F=350mA	1.8	---	2.6	V
Peak Wavelength (峰值波长)	λ_p	I_F =350mA	650	---	665	nm
Spectrum Radiation Bandwidth 半波宽		I_F =350mA	---	20	---	nm
Total radiant flux （辐射功率）	e	I_F=350mA	300	---	650	mW
Photosynthetic Photon Flux （光合光子通量）	PPF	I_F=350mA	---	2.618	---	
		I_F=700mA	---	5.180	---	
Photosynthetic Photon efficacy	PPE	I_F=350mA	---	3.809	---	J
		I_F=700mA	---	3.4326	---	J
Viewing Angle （发光角度）	2	I_F=350mA	---	120	---	deg
Thermal Resistance. （热阻）	R_{THJ-S}	I_F=350mA	---	5	---	/W

Table 1-2 Absolute Maximum Ratings at Ts=25°C 绝对最大值

Parameter（参数）	Symbol（符号）	Rating（值）	Units（单位）
Power Dissipation（功耗）	P_D	2.6	W
Forward Current（正向电流）	I_F	1000	mA
Reverse Voltage（反向电压）	V_R	5	V
Electrostatic Discharge (HBM)（静电）	E_{SD}	2000	V
Operating Temperature（操作温度）	T_{OPR}	-40 ~ +85	
Storage Temperature（储存温度）	T_{OPR}	-40 ~ +100	
Junction Temperature（结温）	T_J	125	

Notes 备注:

1.1/10 Duty cycle, 0.1ms pulse width. 脉宽0.1ms,占空比1/10.

2.The above forward voltage measurement allowance tolerance is ±0.1V. 以上所示电压测量误差 ±0.1V.

3. The above wavelength measurement allowance tolerance is ±1nm. 以上所示波长测量误差 ±1nm.

4. Tolerance of measurement of Total radiant flux/ Radiant Intensity: 10%.辐射功率/强度测量公差：±10%。

5. Care is to be taken that power dissipation does not exceed the absolute maximum rating of the product. 使用功率不能超过规定的最大值。

6. All measurements were made under the standardized environment of Refond. 所有测试都是基于瑞豐現有的标准测试平台。

7.When the LEDs are in operation the maximum current should be decided after measuring the package temperature junction temperature should not exceed the maximum rate. LED 使用的最大电流需要根据散热条件确定，结温不能超过最大值。

1.6 Typical optical characteristics curves 典型光学特性曲线

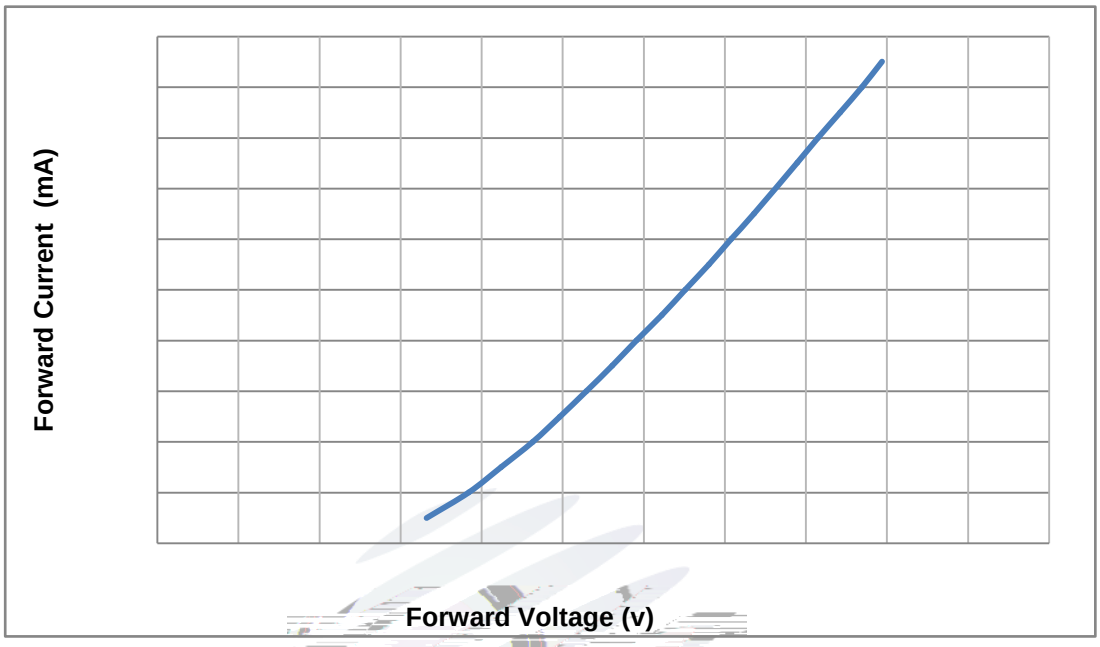

Fig 1-6 Forward Voltage Vs. Forward Current伏安特性曲线

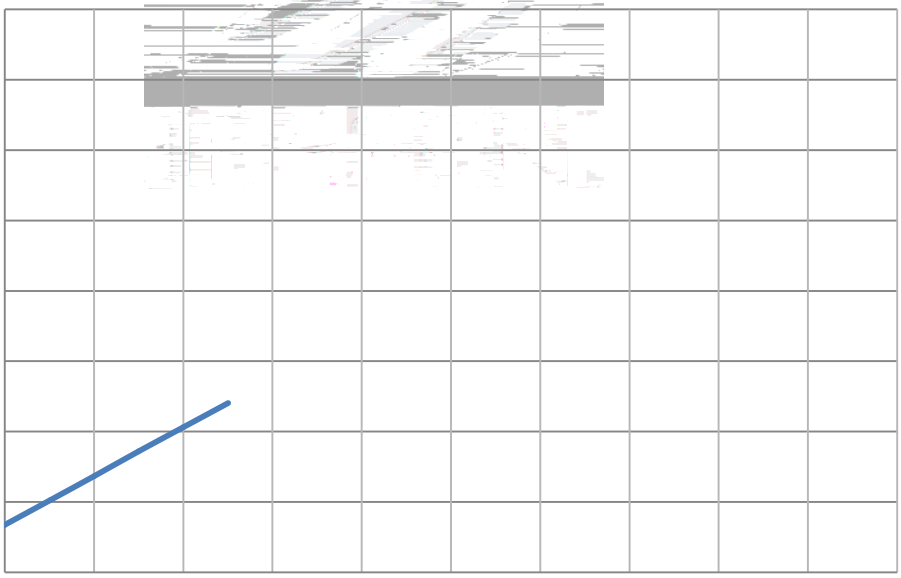

Fig 1-7 Forward Current Vs. Relative Intensity正向电流与相对光强特性曲线

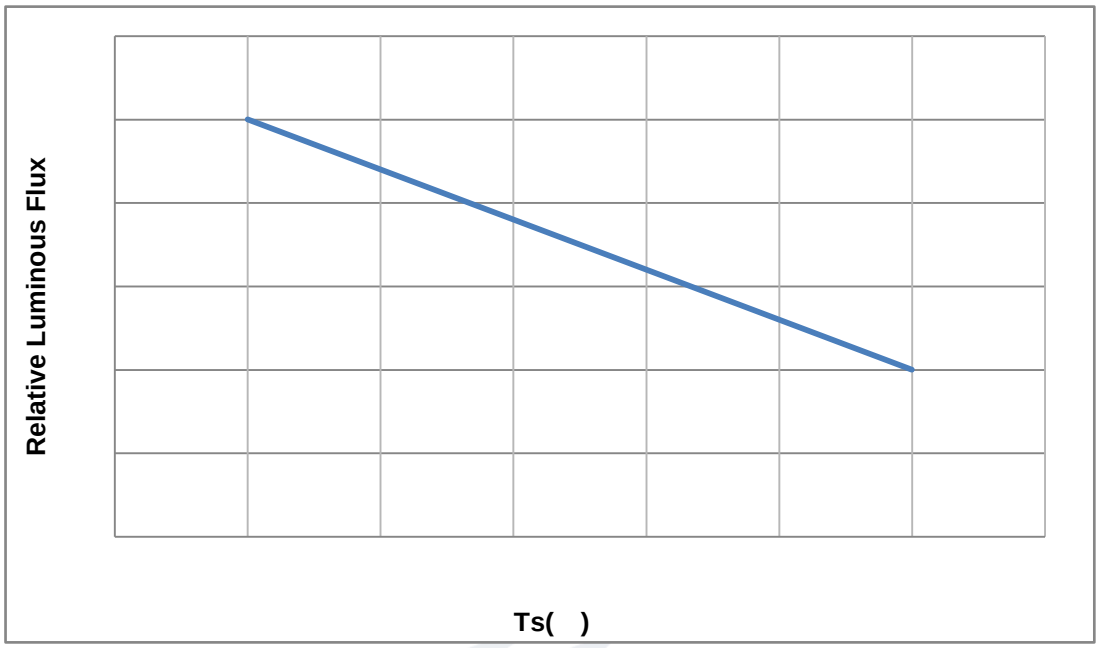

Fig 1-8 Ts Temperature Vs Relative Intensity管脚温度与相对光强特性曲线

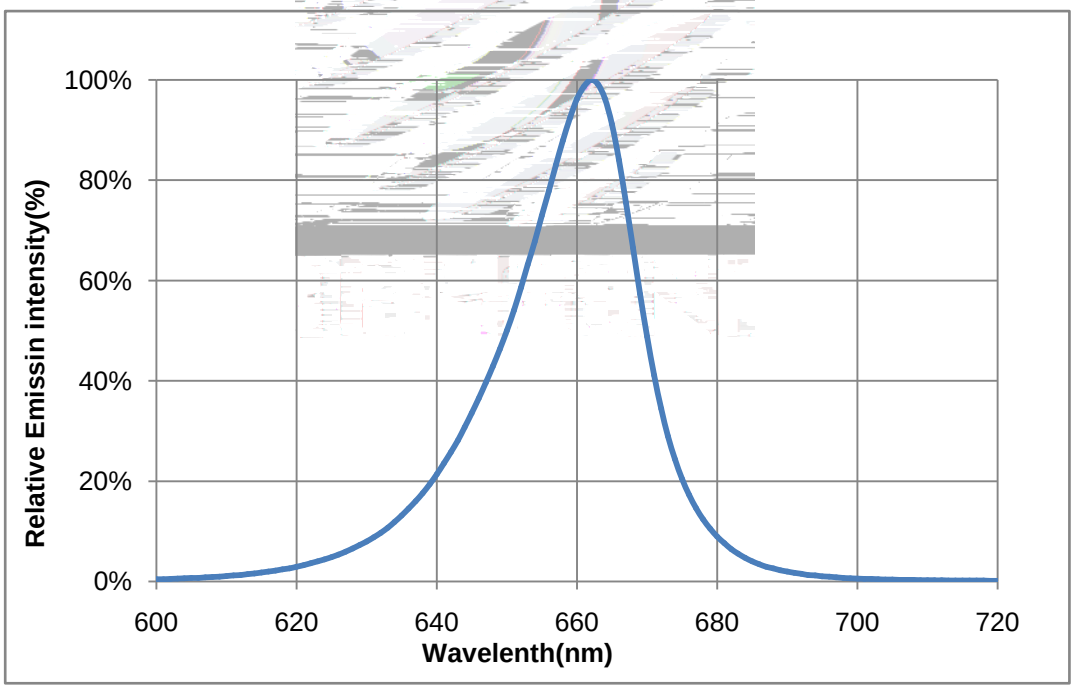

Fig 1-9 Spectrum Distribution光谱分布特性曲线

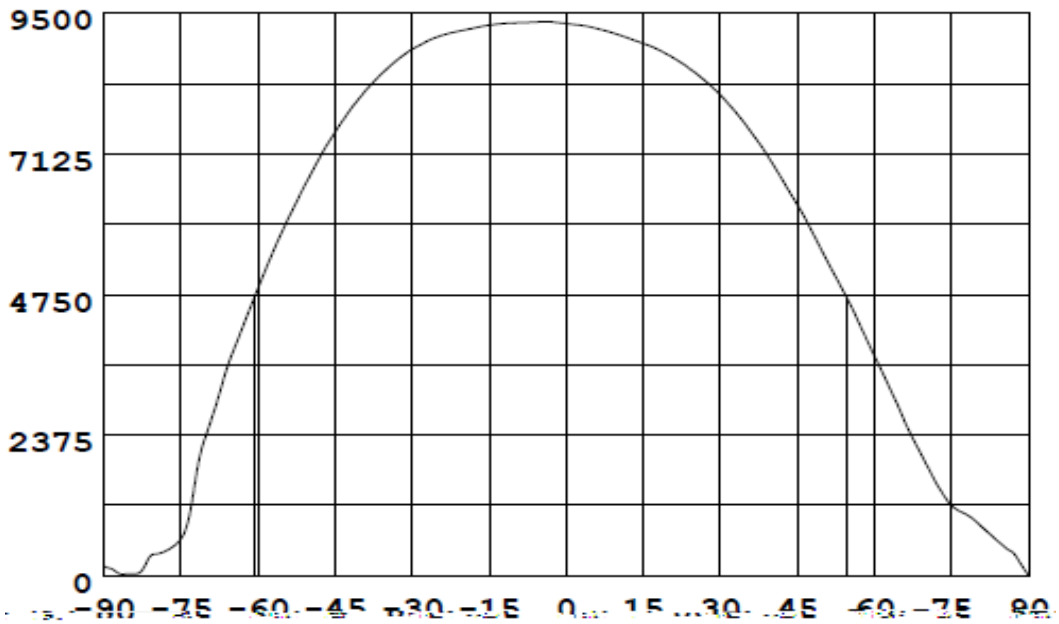

Fig 1-10 Radiationdiagram辐射特性曲线

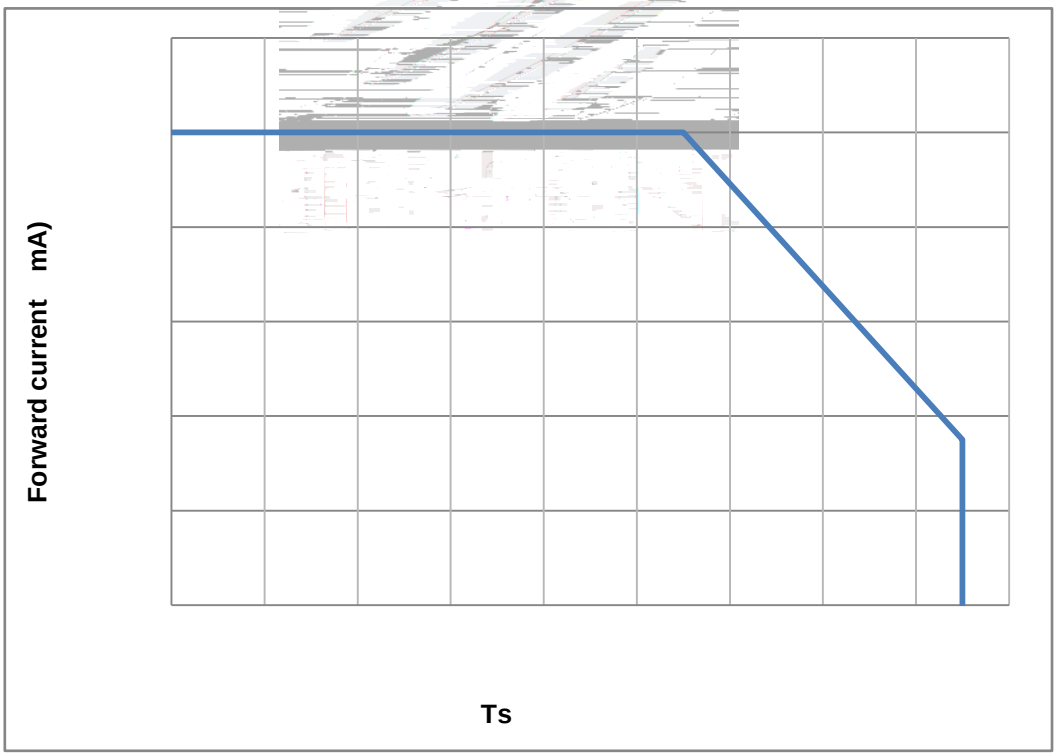

Fig 1-11 Ts Temperature VsForward Current管脚温度与正向电流特性曲线

2. Packaging 产品包装

2.1 Packaging Specification 包装规格

Package:Max 1000pcs/reel.包装每卷最多 1000pcs。

`2.1.1 Carrier Tape Dimension 载带尺寸

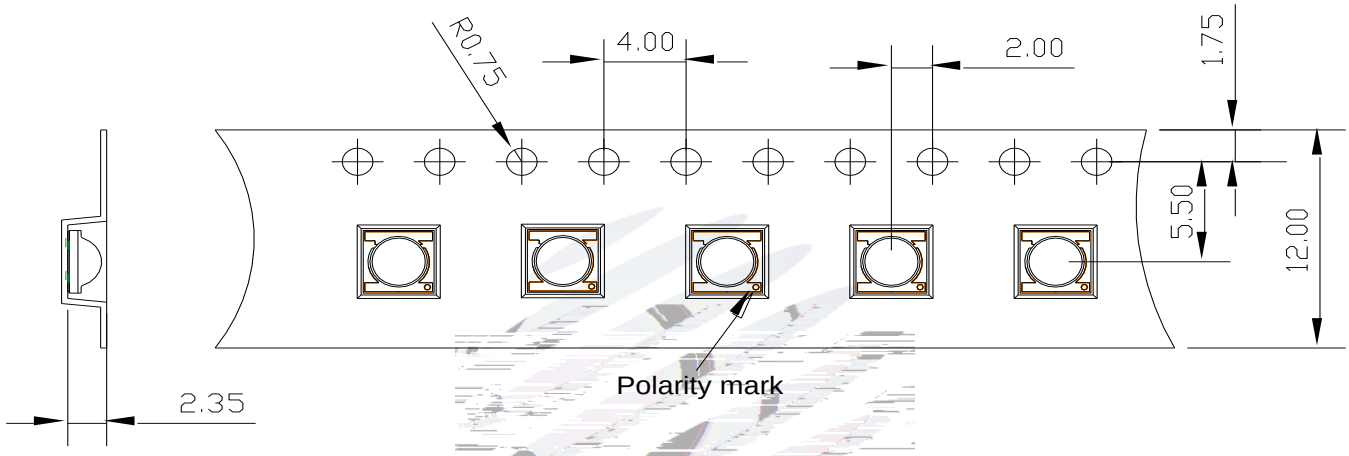

Fig.2-1 Carrier Tape Dimension 载带尺寸

2.1.2 Reel Dimension 卷盘尺寸

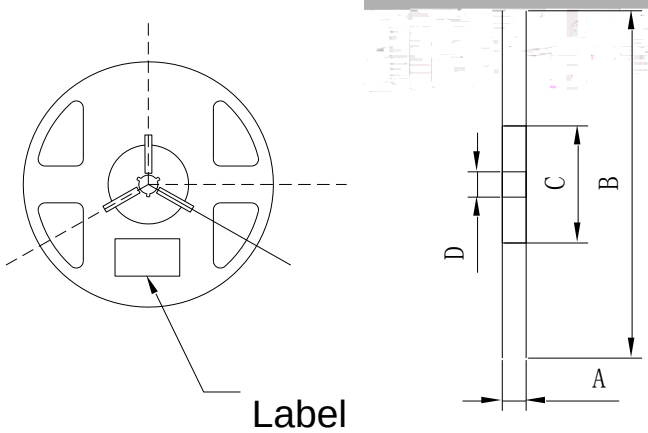

Table 2-1 Dimension 尺寸

A	15.8±1.0mm
B	178±1.0mm
C	59±1. 0mm
D	13.5±0.3mm

Fig.2-2Reel Dimension卷盘

Notes 备注:

The tolerances unless mentioned ±0.1mm. Unit : mm ±0.1 , 。

2.1.3 Label Form Specification 标签规格

Table 2-2 Label Form Specification标签规格

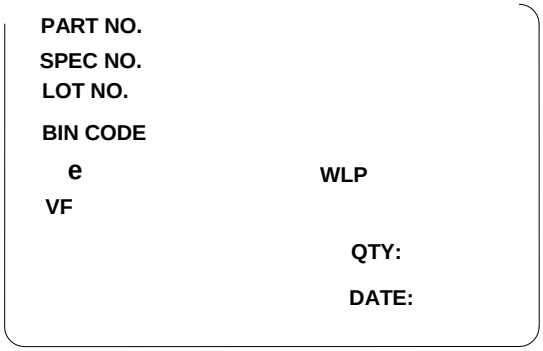

Fig 2-3 Label Form Specification标签规格

PART NO	Part Number 品名
SPEC NO	Spec Number 规格
LOT NO	Lot Number 批次号
BIN CODE	Bin Code 色区
	Total radiant flu 辐射功率
WLP	Peak Wavelength 峰值波长
VF	Forward Voltage 正向电压
QTY	Packing Quantity 数量
DATE	Made Date 生产日期

2.2 Moisture Resistant Packing 防潮包装

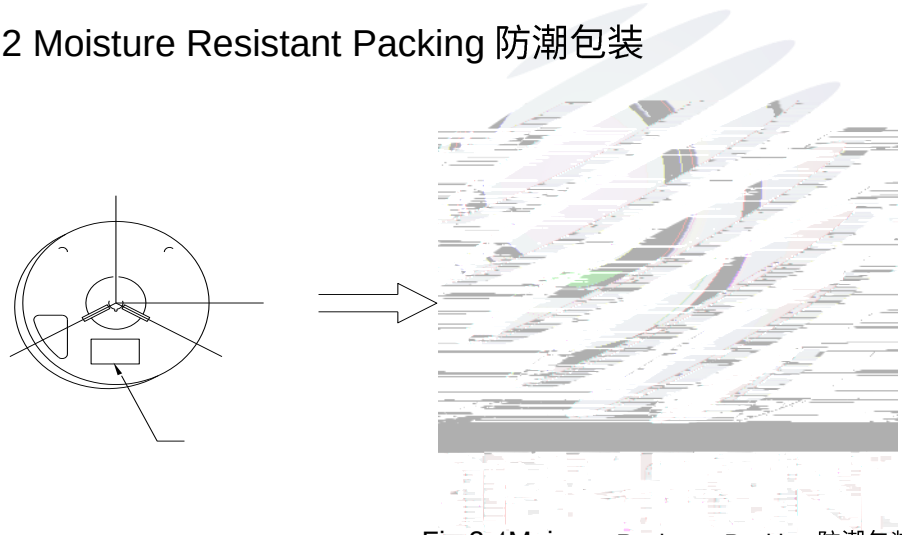

Fig.2-4Moisture Resistant Packing 防潮包装

2.3 Cardboard Box 包装纸箱

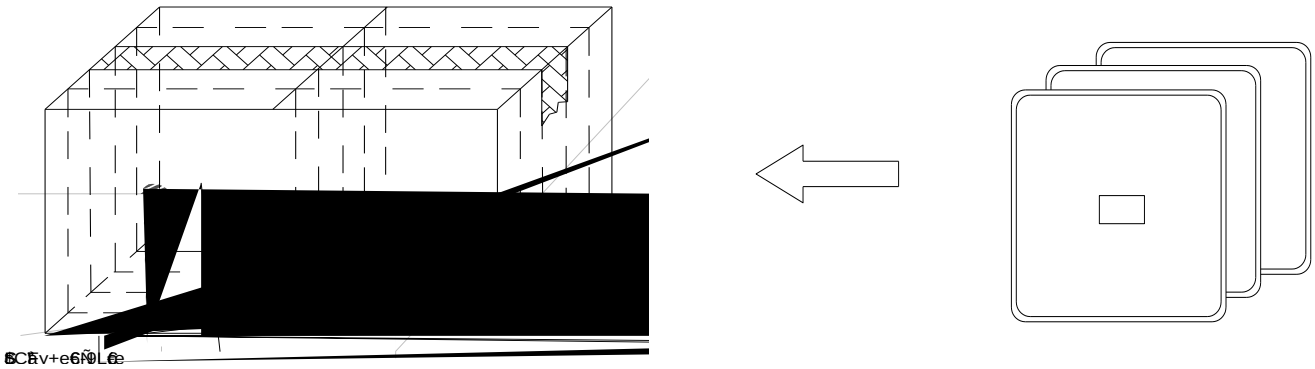

Fig.2-5 Cardboard Box 包装纸箱

2.4 Reliability Test Items And Conditions 信赖性测试项目及条件

Table 2-3 Reliability Test Items And Conditions 信赖性测试项目及条件

TestItems 项目	Ref.Standard 参考标准	Test Condition 测试条件	Time 时间	Quantity 数量	Ac/Re 接收/拒收
Reflow 回流焊	JESD22-B106	Temp:260℃max T=10 sec	2times	10pcs.	0/1
Thermal Shock 冷热冲击	JESD22-A106	-40℃ 15min 10s 100℃ 15min	100 cycle	10pcs.	0/1
High Temperature Storage 高温保存	JESD22-A103	Temp:100℃	1000hrs.	10pcs.	0/1
Low Temperature Storage 低温保存	JESD22-A119	Temp:-40℃	1000hrs.	10pcs.	0/1
Life Test 常温测试	JESD22-A108	Ta=25℃ I_F=350mA	1000hrs.	10pcs.	0/1
High Temperature High Humidity Life Test 高温高湿测试	JESD22-A101	60℃/ 90%R_H I_F=350mA	1000hrs.	10pcs.	0/1

2.5 Criteria For Judging Damage 失效判定标准

Table Criteria For Judging Damage 失效判定标准

Test Items 项目	Symbol 符号	Test Condition 测试条件	Criteria For Judgement 判定标准	
			Min. 最小	Max. 最大
Forward Voltage 正向电压	V_F	I_F=350mA	-	U.S.L*)x1.1
Reverse Current 反向电流	I_R	V_R = 5V	-	U.S.L*)x2.0
Total radiant flux 辐射功率	e	I_F=350mA	L.S.L*)x0.7	-

Notes 备注:

1.U.S.L: Upper standard level 规格上限 L.S.L: Lower standard level 规格下限

2. The above reliability tests is based on the verification of a single/strip LED of Refond's existing experimental platform, the reliability experiment was taken under good heat dissipation conditions. when customers applies the LED to the series and parallel circuit, should take consideration of all the factors such as the current, voltage distribution, heat dissipation and others. 以上可靠性测试是基于瑞丰现有实验平台单颗/条 LED 在良好散热条件验证下的结果。客户端将 LED 应用于串、并联线路时，需自行评估电流、电压分配、散热等问题。

3.The technical information shown in the data sheets are limited to the typical characteristics and circuit examples of the referenced products. It does not constitute the warranting of industrial property nor the granting of any license. 以上技术数据仅为产品的典型值，只作为参考，不作为任何应用条件及应用方式的保证。

3. SMT Reflow Soldering Instructions SMT 回流焊说明

3.1SMT Reflow Soldering Instructions SMT 回流焊说明

Fig.3-1 SMT Reflow Soldering Instructions SMT 回流焊说明

Table 3-1Parameter 参数

Average temperature rise speed平均升温速度（Tsmax 至T_P）	最高3 °C/秒 Max 3 °C/ s
Preheating: minimum temperature预热：最低温度（Tsmin)	150 °C
Preheating: Max temperature预热：最高温度（Tsmax)	200 °C
Preheating: Time预热：时间（Tsmin至Tsmax）	60 - 120秒 60s-120s
Time limited to maintain high temperature: the temperature限时维持高温：温度(T_L)	217 °C
Time limited to maintain high temperature: The Time 限时维持高温：时间 (t_L)	最多60秒 Max 60s

Peak /Classificatn-US

Notes 备注：

(1)Reflow soldering should not be done more than two times. In the case of more than 24 hours passed soldering after first, LEDs will be damaged. 回流焊次数不可以超过两次，两次回流焊的时间间隔如果超过24小时，LED可能由于吸湿而损坏。

(2)When soldering , do not put stress on the LEDs during heating.当焊接时，不要在材料受热时用力压胶体表面。

3.1.1 Soldering Iron 烙铁焊接

(1) When hand soldering, keep the temperature of iron below less 300 less than 3 seconds

当手工焊接时，烙铁的温度必须小于300℃，时间不可超过3秒。

(2) The hand solder should be done only one time.手工焊接只可焊接一次。

3.1.2 Repairing 修修

Repair should not be done after the LEDs have been soldered. When repairing is unavoidable,a double-head soldering iron should be used (as below figure). It should be confirmed in advance whether the characteristics of LEDs will or will not be damaged by repairing.

LED回流焊后不应该修复，当必须修复时，必须使用双头烙铁，而且事先应确认此种方式会不会损坏LED本身的特性。

3.1.3 Cautions 注意事项

(1) The encapsulated material of the LEDs is silicone. Therefore the LEDs have a soft surface on the top of package. The pressure to the top surface will be influence to the reliability of the LEDs. Precautions should be taken to avoid the strong pressure on the encapsulated part. So when usethe picking up nozzle, the pressure on the silicone resin should be proper. LED封装胶为硅胶，表面较软，用力按压胶体表面会影响LED可靠性，因此应有预防措施避免在按压器件，当使用吸嘴时，胶体表面的压力应是恰当的。

(2) Components should not be mounted on warped (non coplanar) portion of PCB. After soldering, do not warp the circuit board.LED 灯珠不要焊接在弯曲的 PCB [illegible]

(3) Do not apply mechanical force or excess vibration during the cooling process to normal temperature after soldering. Do not rapidly cool device after soldering.回流焊之后冷却过程中，不要对材料实加外力，也不要有震动，回流焊后，不要采用激剧冷却的方式。

4. Handling Precautions 产品使用注意事项

4.1 Handling Precautions 产品使用注意事项

(1) LED operating environment and sulfur element composition cannot be over 100PPM in the LEDmating usage material. This is provided for informational purposes only and is not a warranty or endorsement.LED 工作环境及与 LED 适配的材料中硫元素及化合物成份不可超过 100PPM.这只是一个建议，不作任何品质担保。

(2) In order to prevent ex- ternal material from getting into the inside of LED, which may cause the malfunction of LED, the single content of Bromine element is required to be less than 900PPM,the single content of Chlorine elementis required to be less than 900PPM,the total content of Bromine element and Chlorine element in the external materials of the application products is required to be less than 1500PPM. This is provided for informational purposes only and is not a warranty or endorsement.为了防止外界物质进入 LED 内部以造成 LED 的损伤，所处环境及所用套件等等，单一的溴元素含量要求小于 900PPM，单一氯元素含量要求小于 900PPM，溴元素与氯元素总含量必须小于 1500PPM. 这只是一个建议，不作任何品质担保。

(3) VOCs (Volatile organic compounds) emitted from materials used in the construction of fixtures can penetrate silicone encapsulants of LEDs and discolor when exposed to heat and photonic energy. The result can be a significant loss of light output from the fixture. Knowledge of the properties of the materials selected to be used in the construction of fixtures can help prevent these issues. Refond advises against theuse of any chemicals or materials that have been found or are suspected to have an adverse affect on device performance or reliability. To verifycompatibility, Refond recommends that all chemicals and materials be tested in the specific application and environment for which they are intended tobe used. Attaching LEDs, do not use adhesives that outgas organic vapor. 应用套件中的挥发性物质会渗透到 LED 内部，在通电产生光子及热的条件下，会导致 LED 反射便后任何变化，变色，进而造成严重光衰。提前了解套件材料能够避免产生这些问题。瑞丰 LED 品件的性能可能受到特定的物质或材料，无论这些材料是已经证实或怀疑会产生不良影响。针对特定的用途和使用环境，瑞丰建议对所有的物质和材料进行相容性的测试。在贴装 LED 时候，不要使用能产生有机挥发性气体的粘结剂。

(4) Handle the component along the side surface by using forceps or appropriate tools; do not directlytouch or Handle the silicone lens surface, it may damage the internal circuitry.通过使用适当的工具从材料侧面夹取，不可直接用手或尖锐金属压胶体表面，它可能会损坏内部电路。

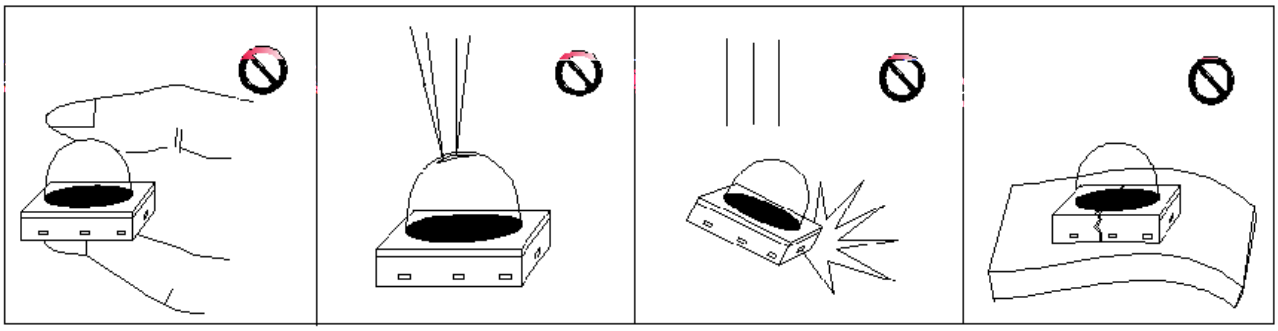

Fig 4-1

(5) In designing a circuit,the current through each LED can not be exceed the absolute maximum rating specified for each LED.In the meanwhile,resistors for protection should be applied,otherwise slight voltage shift will cause big current change,burn out may happen. The driving circuit must be designed to allow forward voltage only when it is ON or OFF.If the reverse voltage is applied to LED, migration can be generated resulting in LED damage. 设计电路时，通过 LED 的电流不能超过规定的最大值，同时，还需使用保护电阻，否则，微小的电压变化将会引起较大电流变化，可能导致产品损毁。电路设计必须保证只有在开启或者关闭的时候出现正向电压的变化，不要施加反压，否则会损坏 LED。

(6) Thermal Design is paramount importance because heat generation may result in the Characteristics decline,such as brightness decreased,Color change and so on.Please consider the heat generation of the LEDs when making the system design.LED 容易因为自身的发热和环境的温度改变而改变，温度升高会降低 LED 发光效率，影响发光颜色，所以在设计时应充分考虑散热问题。

(7) Compared to standard encapsulants, silicone is generally softer, and the surface is more likely to attract dust requiring special care during processing. In cases where a minimal level of dirt and dust particles cannot be guaranteed, a suitable cleaning solution must be applied to the surface after the soldering of components. Refond suggests using isopropyl alcohol for cleaning. In case other solvents are used, it must be assured that

Table 4-1 Storage 储存

Conditions 种类		Temperature 温度	Humidity 湿度	Time 时间
Storage	Before Opening Aluminum Bag 拆包前	≤30℃	≤75%	Within 1 Year From Date 一年内
	After Opening Aluminum Bag 拆包后	≤30℃	≤60%	168hours 168

Version History/修订历史

Date日期	Revisor修订者	Version版本	Verifier审核	Remarks备注
2021-04-30		E/0		RD

瑞豐光電 REFOND
www.refond.com

Declare 申明

This specification is written both in English and in Chinese and the latter is formal.

产品规格书以中英文方式书写，若有冲突以中文版本为准。