Contents

1. Description 3
1.1General Description 3
1.2Features 3
..... 3

1. Description

1.1General Description

The Blue source color devices are made with GaN on Substrate Light Emitting Diode .

Product Package:3.50mmX2.80mmX3.25mm.

LED GaN 3.50mmX2.80mmX3.25mm.

1.2Features

►PLCC4 Package. PLCC4

►Extremely wide viewing angle.

►Suitable for all SMT assembly and solder process. SMT

►Available on tape and reel.

►Moisture sensitivity level: Level 2. Level2

►Compliance with RoHS and REACH. RoHS REACH

►Qualifications: The product qualification test plan is based on the guidelines of AEC-Q102 Stress Test Qualification for Automotive Grade Discrete Semiconductors

AEC-Q102

1.3Application

► Automotive Lighting Interior and Exterior.

深圳市瑞丰光电子股份有限公司
承认专用章

1.4Package Dimension

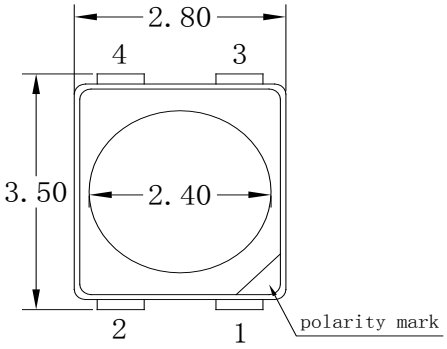

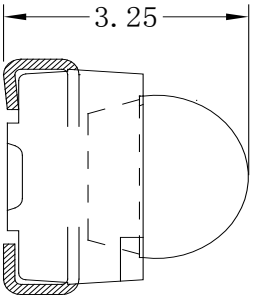

Fig.1-1 Top View

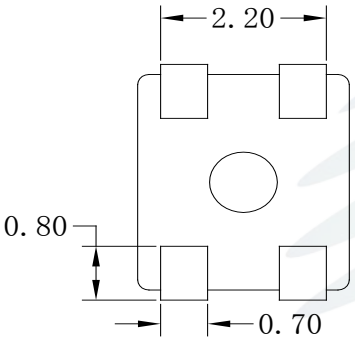

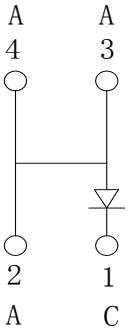

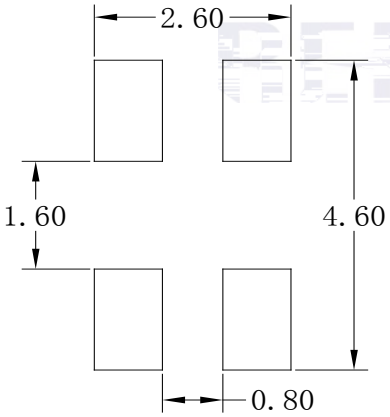

Notes

1. All dimensions units are millimeters.

2. All dimensions tolerances are ±0.2mm unless otherwise noted. ± 0.2

深圳市瑞丰光电子股份有限公司
承认专用章

1.5Product Parameters

Table 1-1 Electrical / Optical Characteristics at Ts=25°C

Item	Symbol	Test Condition	Value			Unit
			Min.	Typ.	Max.	
Forward Voltage	V_F	I_F=50mA	2.8	3.1	3.4	V
Reverse Current	I_R	V_R=5V	---	---	10	uA
Luminous Intensity	Φ	I_F=50mA	2300	3000	4300	mcd
Dominant wavelength	Wd	IF=50mA	465	467	475	nm
Viewing Angle	2θ1/2	I_F=50mA	---	60	---	deg
Thermal Resistance.	R_{THJ-S}	I_F=50mA	---	---	150	/W

Table 1-2 Absolute Maximum Ratings at Ts=25°C

Parameter

Notes

1. 1/10 Duty cycle, 10ms pulse width. 10ms, 1/10.

2. The above forward voltage measurement allowance tolerance is ±0.1V. ± 0.1V.

3. The above color coordinates measurement allowance tolerance is ±0.005. ± 0.005.

4. The above luminous intensity measurement allowance tolerance ±10%.
   ± 10%.

5. Care is to be taken that power dissipation does not exceed the absolute maximum rating of the product.

6. All measurements were made under the standardized environment of Refond.

7.When the LEDs are in operation the maximum current should be decided after measuring the package temperature,junction temperature should not exceed the maximum rate. LED

8. ESD yield is over 90% at 2000V ESD (HBM). ESD protection during products handing is needed. 90% LED ESD2000V ,

1.6Bin Range Of Forward Voltage and Luminous Intensity and Dominant wavelength (IF=50mA) BIN (IF=50mA)

Table 1-3

V_F	G1	G2	H1	H2	I1	I2
	2.8-2.9	2.9-3.0	3.0-3.1	3.1-3.2	3.2-3.3	3.3-3.4
IV mcd	N2	O1	O2			
	2300-2800	2800-3500	3500-4300			
WD(nm)	D1	D2	E1	E2		
	465-467.5	467.5-470	470-472.5	472.5-475		

深圳市瑞丰光电子股份有限公司
承认专用章

1.7 Typical Optical Characteristics Curves

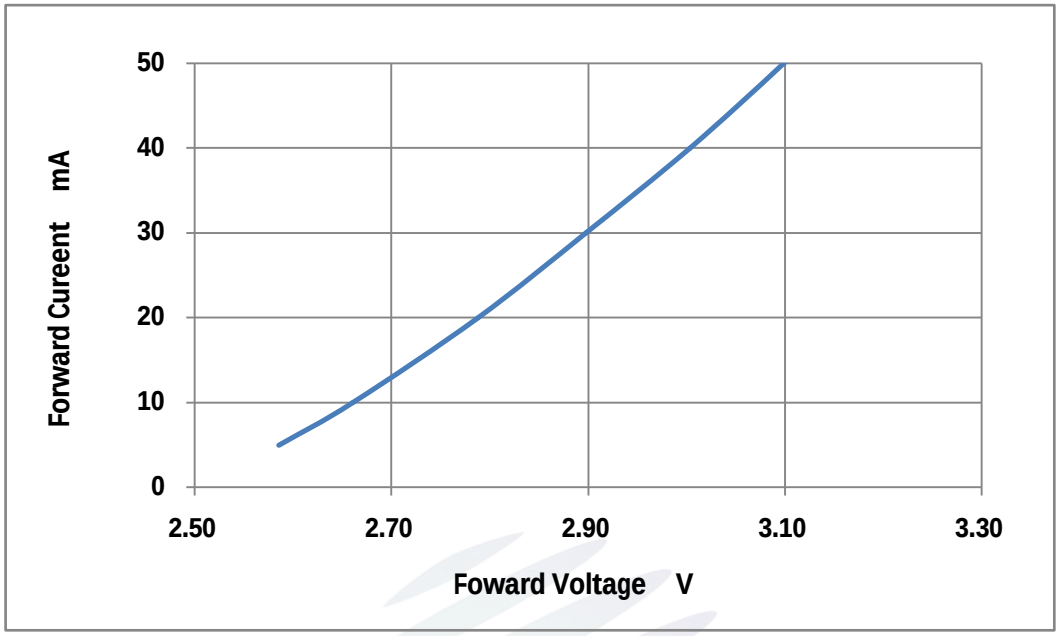

Fig. 1-7 Forward Voltage Vs Forward Current

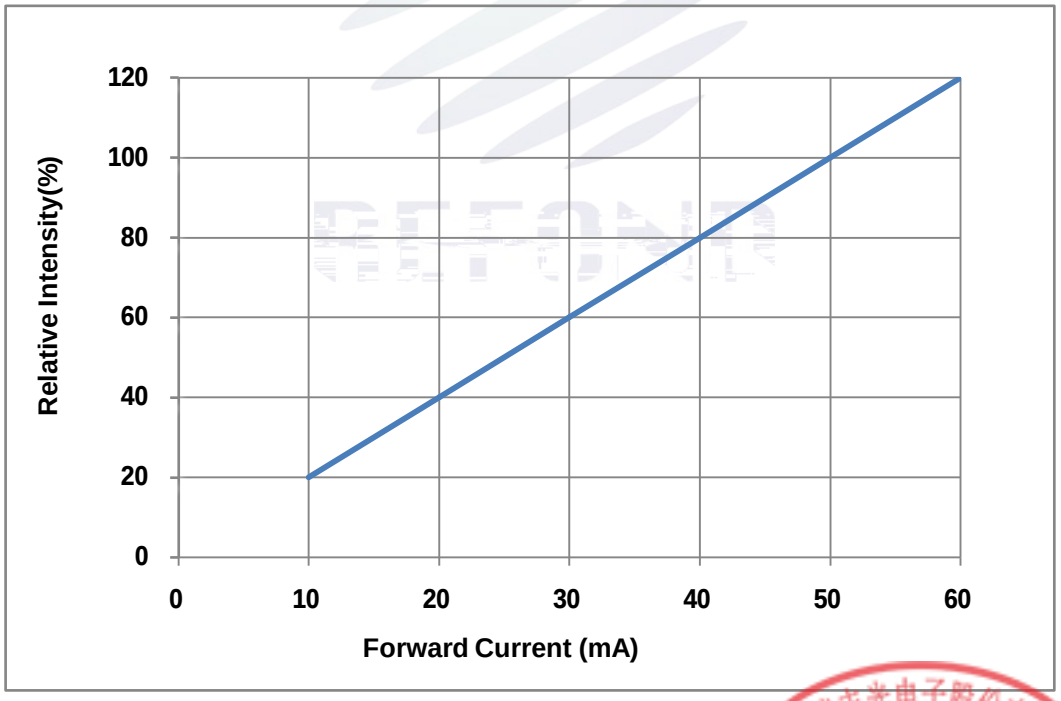

Fig. 1-8 Forward Current Vs Relative Intensity

深圳市瑞丰光电子股份有限公司
承认专用章

Fig. 1-9 Solder Temperature Vs Relative Intensity

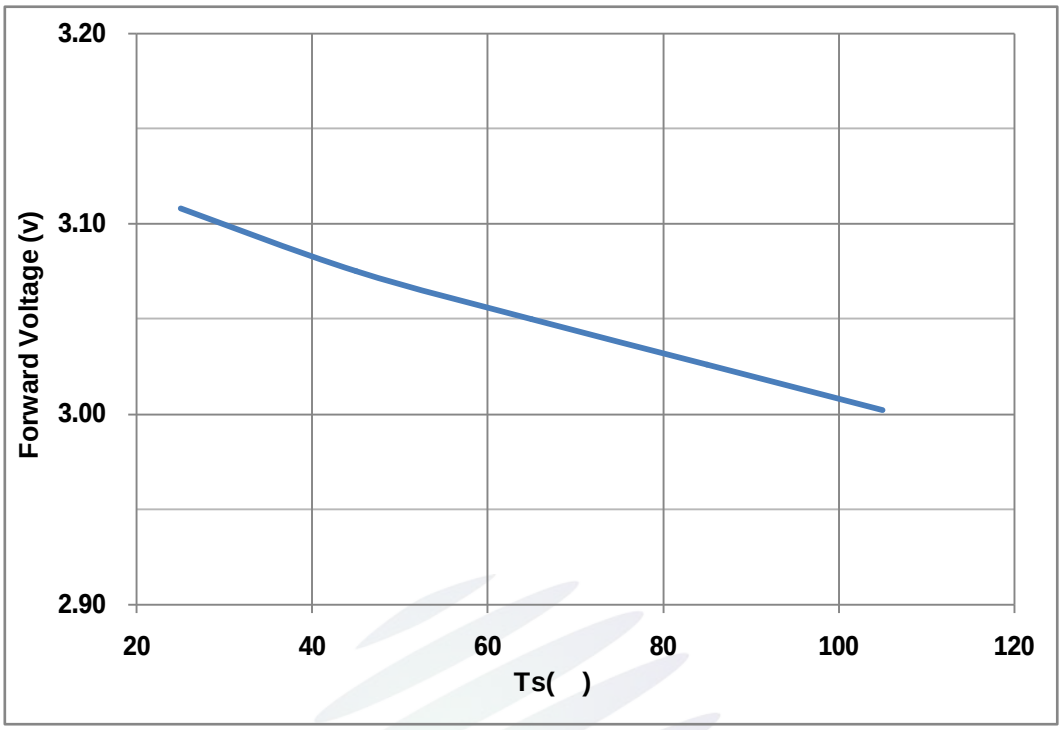

Fig. 1-11 Forward Voltage Vs Solder Temperature

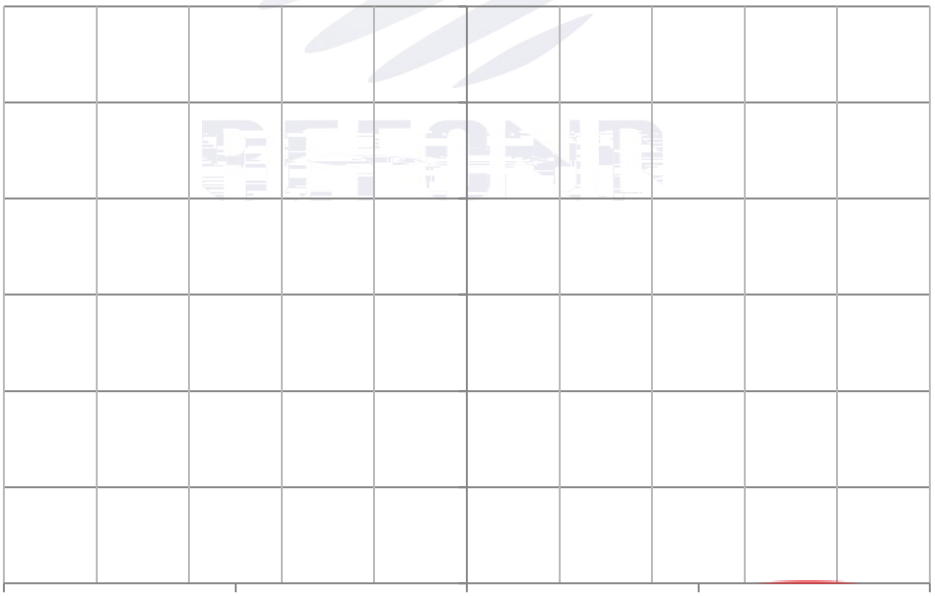

Fig. 1-12 Radiation diagram

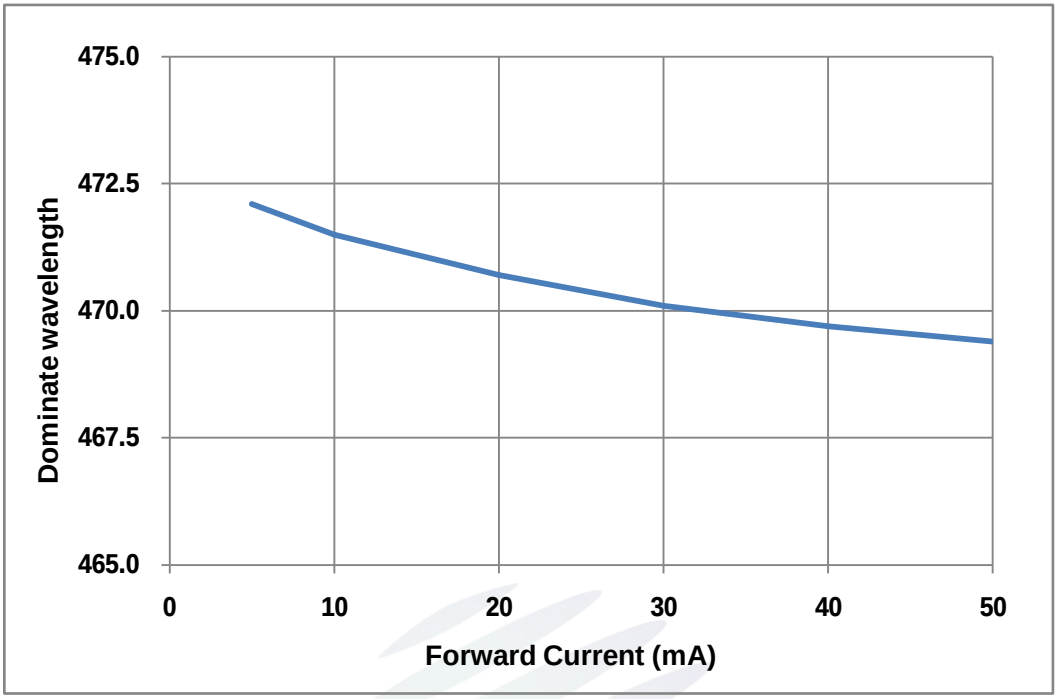

Fig. 1-13 Forward current vs. Dominate wavelength (Ts=25°C)

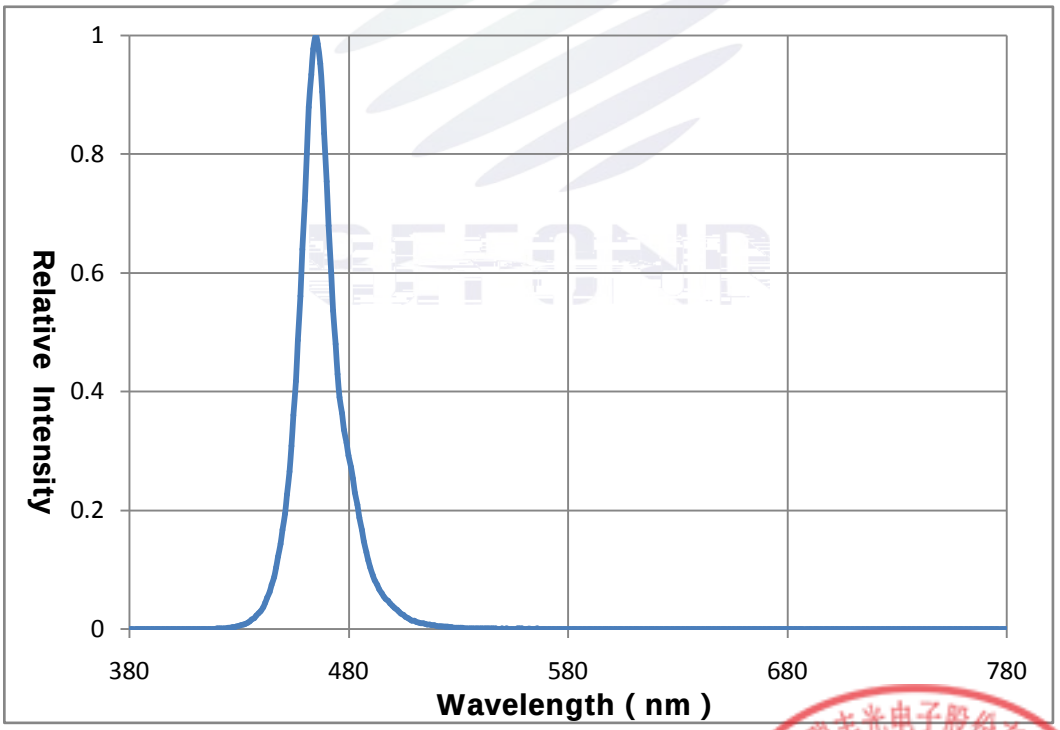

Fig. 1-14 Spectrum Distribution

深圳市瑞丰光电子股份有限公司
承认专用章

2.1.3Label Form Specification

Table 2-2 Specification

PART NO.	Part Number
SPEC NO.	Spec Number
LOT NO.	Lot Number
BIN CODE	Bin Code
Φ	Luminous flux
XY	Chromaticity Bin
V_F	Forward Voltage
WLD	Wavelength
QTY	Packing Quantity
DATE	Made Date

Fig. 2-3 Label

2.2Moisture Resistant Packing

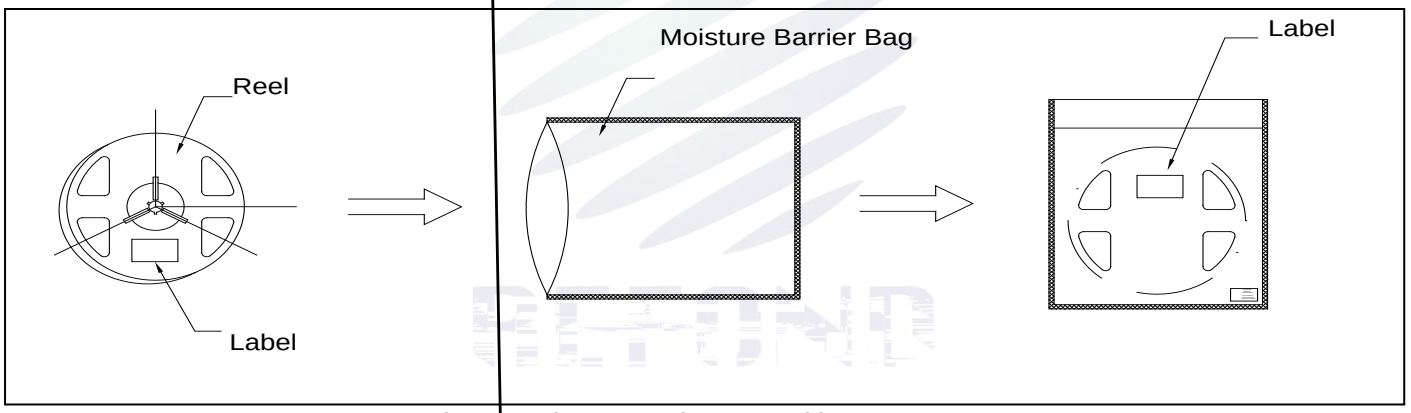

Fig.2-4Moisture Resistant Packing

2.3Cardboard Box

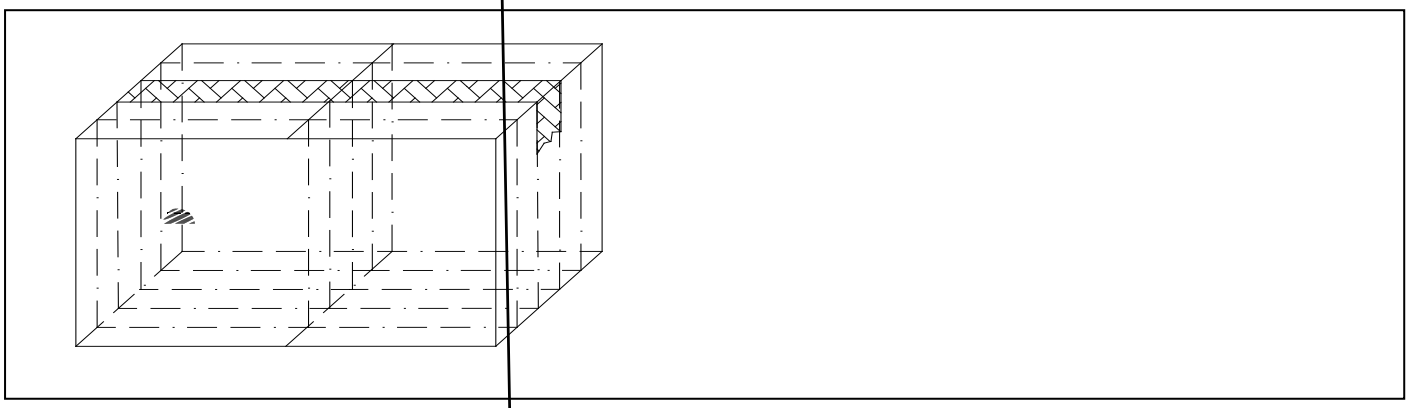

Fig.2-5Cardboard Box

2.4Reliability Test Items And Conditions

Table 2-3 **Reliability Test Items And Conditions**

Test Items	Ref.Standard	Test Condition	Time	Quantity	Ac/Re /
Reflow	JESD22-B106	Temp:260 max T=10 sec	2times	20pcs.	0/1
MSL2 2	JESD22-A113	85 / 60%R_H	168 hrs.	20pcs.	0/1
Thermal Shock	JEITAED-4701 300307	-40 15min ↑↓10s 125 15min	1000 cycle	20pcs.	0/1
Life Test	JESD22-A108	Ta=100 I_F=50mA	1000hrs.	20pcs.	0/1
High Temperature High Humidity Life Test	JESD22-A101	85 / 85%R_H I_F=50mA	1000hrs.	20pcs.	0/1

深圳市瑞丰光电子股份有限公司
承认专用章

2.5 Criteria For Judging Damage

Table 2-4**Criteria For Judging Damage**

Test Items	Symbol	Test Condition	Criteria For Judgement	
			Min.	Max.
Forward Voltage	V_F	I_F=50mA	-	U.S.L*)x1.1
Reverse Current	I_R	V_R = 5V	-	U.S.L*)x2.0
Luminous Flux	Φ	I_F=50mA	L.S.L*)x0.7	-

Notes

1.U.S.L: Upper standard level L.S.L: Lower standard level

2.The above reliability tests is based on the verification of a single/strip LED of Refond's existing experimental platform,the reliability experiment was taken under good heat dissipation conditions. when customers applies the LED to the series and parallel circuit, should take consideration of all the factors such as the current, voltage distribution, heat dissipation and others. / LED

LED

3.The technical information shown in the data sheets is limited to the typical characteristics and circuit examples of the referenced products. It does not constitute the warranting of industrial property nor the granting of any license.

深圳市瑞丰光电子股份有限公司
承认专用章

3. SMT Reflow Soldering Instructions SMT 回流焊说明

3.1SMT Reflow Soldering Instructions SMT

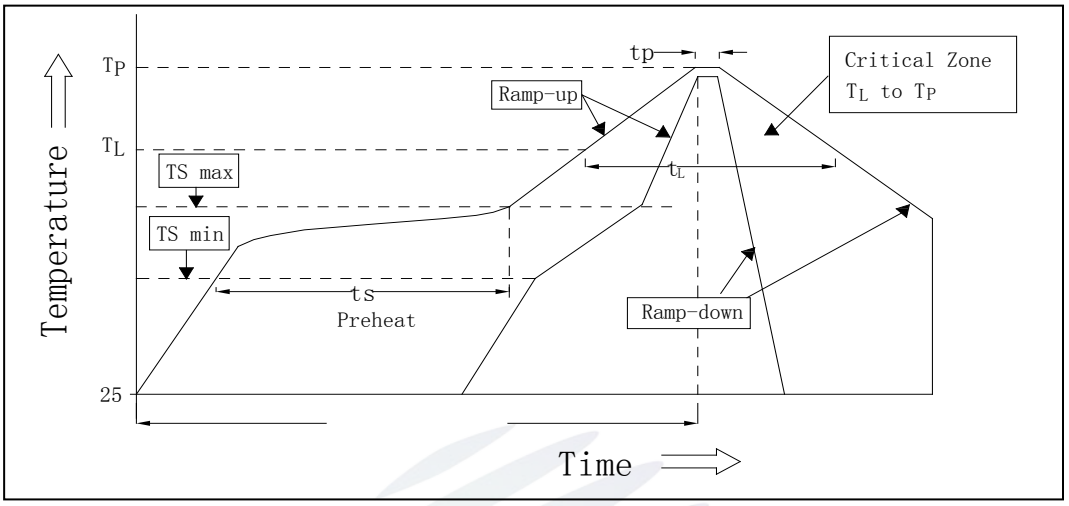

Fig.3-1SMT Reflow Soldering Instructions SMT

Table 3-1Reflow parameters

Average temperature rise speed Tsmax T_P	3 °C/ Max 3 °C/ s
Preheating: minimum temperature (Tsmin)	150 °C
Preheating: Max temperature (Tsmax)	200 °C
Preheating: Time Tsmin Tsmax	60 - 120 60s-120s
Time limited to maintain high temperature: the temperature (T_L)	217 °C
Time limited to maintain high temperature: The Time (t_L)	60 Max 60s
Peak /Classification of temperature: / (T_P)	260 °C
Time limit classification of peak temperature time t_p	10 Max 10s
(T_P) 5 °C Hold time within 5 °C with the actual peak temperature (TP)	30 Max 30s
Cooling speed	6 °C/ Max 6 °C/ s
25 °C Needed time from 25 °C to Tp	8 Max 8 minutes

Notes

(1)Reflow soldering should not be done more than twice. If more than 24 hours between the two solderings ,LED will be damaged. 24 LED

(2)When soldering , do not put stress on the LEDs during heating.

3.1.1 Soldering Iron

(1) When do soldering by hand, keep the temperature of iron below less 300 less than 3 seconds.
, 300 3

(2) Soldering by hand should be done only one time.

3.1.2 Repairing

Repairing should not be done after the LEDs have been soldered. When repairing is unavoidable,a double-head soldering iron should be used (as below figure). It should be confirmed in advance whether the characteristics of LEDs will or not be damaged by repairing.

LED LED

3.1.3 Cautions

(1) The encapsulated material of the LEDs is silicone. Therefore the LEDs have a soft surface on the top of package. The pressure to the top surface will be impacted on the reliability of the LEDs. Precautions should be taken to avoid the strong pressure on the encapsulated part. So when use the picking up nozzle, the pressure on the silicone resin should be proper. LED LED

(2) Components should not be mounted on warped (non coplanar) portion of PCB. After soldering, do not warp the circuit board.LED PCB

(3) Do not apply mechanical force or excess vibration during the cooling process to normal temperature after soldering. Do not rapidly cool device after soldering.

深圳市瑞丰光电子股份有限公司
承认专用章

4. Handling Precautions

4.1 Handling Precautions

(1) LED operating environment and sulfur element composition cannot be over 100PPM in the LED mating usage material. This is provided for informational purposes only and is not a warranty or endorsement.LED

LED 100PPM.

(2) In order to prevent ex-ternal material from getting into the inside of LED, which may cause the malfunction of LED, the single content of Bromine element is required to be less than 900PPM,the single content of Chlorine elementis required to be less than 900PPM,the total content of Bromine element and Chlorine element in the external materials of the application products is required to be less than 1500PPM. This is provided for informational purposes only and is not a warranty or endorsement.

LED LED 900PPM

900PPM 1500PPM.

(3) VOCs (Volatile organic compounds) emitted from materials used in the construction of fixtures can penetrate silicone encapsulants of LEDs and discolor when exposed to heat and photonic energy. The result can be a significant loss of light output from the fixture. Knowledge of the properties of the materials selected to be used in the construction of fixtures can help prevent these issues. Refond advises against the use of any chemicals or materials that have been found or are suspected to have an adverse affect on device performance or reliability. To verify compatibility, Refond recommends that all chemicals and materials be tested in the specific application and environment for which they are intended to be used. Attaching LEDs, do not use adhesives that outgas organic vapor. LED

LED

LED

LED

(4) Handle the component along the side surface by using forceps or appropriate tools; Do not directly touch or Handle the silicone lens surface, it may damage the internal circuitry.

深圳市瑞丰光电子股份有限公司 承认专用章

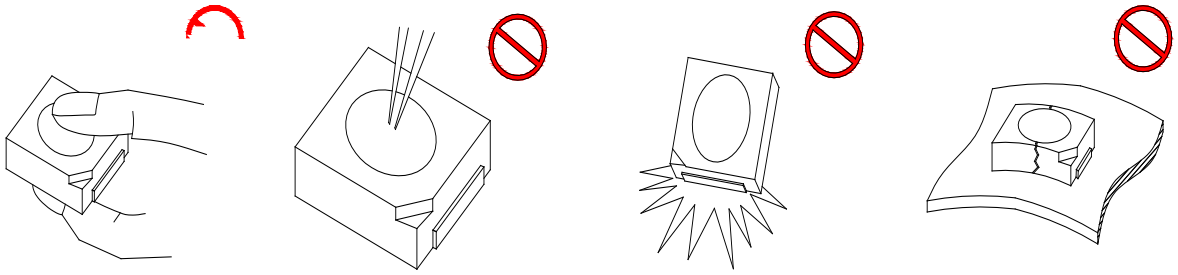

Fig 4-1Handling Precautions

(5) In designing a circuit,thecurrent through each LED can not exceed the absolute maximum rating specified for each LED.In the meanwhile,resistors for protection should be applied,other wise slight voltage shift will cause big current change,burn out may happen. The driving circuit must be designed to allow forward voltage only when it is ON or OFF.If the reverse voltage is applied to LED, migration can be generated resulting in LED damage. LED

LED

(6) Thermal Design is paramount importance because heat generation may result in the Characteristics decline,such as brightness decreased,Color change and so on.Please consider the heat generation of the LEDs when making the system design.LED LED

(7) Compared to standard encapsulants, silicone is generally softer, and the surface is more likely to attract dust,requiring special care during processing. In cases where a minimal level of dirt and dust particles cannot be guaranteed, a suitable cleaning solution must be applied to the surface after the soldering of components. Refond suggests using isopropyl alcohol for cleaning. In case other solvents are used, it must be assured that these solvents do not dissolve the package or resin. Ultrasonic cleaning is not recommended. Ultrasonic cleaning may cause damage to the LED.

LED

Table 4-1Storage

Conditions		Temperature	Humidity	Time
Storage	Before Opening Aluminum Bag	≤ 30	≤ 75%	Within 1 Year From Date
	After Opening Aluminum Bag	≤ 30	≤ 60%	Recommended for use within 24 hours 24
Baking		60 ± 5	-	≥ 24hours 24

(8) If the moisture absorbent material silica gel has faded away or the LEDs have exceeded the storage time,baking treatment should be performed after unpacking and based on the following condition 60 ± 5 for above 24 hours.

60 ± 5 24

If the package is flatulence or damaged,please notify the sales staff to assist.

(9)Similar to most Solid state devices; LEDs are sensitive to Electro-Static Discharge (ESD) and Electrical Over Stress (EOS). LED

(10) Other points for attention, please refer to our relevant information.

深圳市瑞丰光电子股份有限公司
承认专用章

Version History/

Date	Revisor	Version	Verifier	Remarks
2021/03/11	Li xianhui	E0	Zhu yiming	New issue
2022/07/18	Li Xianhui	E1	Zhu Yiming	Template update

www.refond.com

深圳市瑞丰光电子股份有限公司
承认专用章

Declare

This specification is written both in English and in Chinese and the latter is formal.